FCC Information and Copyright

This equipment has been tested and found to comply with the limits of a Class B digital device, pursuant to Part 15 of the FCC Rules. These limits are designed to provide reasonable protection against harmful interference in a residential installation. This equipment generates, uses, and can radiate radio frequency energy and, if not installed and used in accordance with the instructions, may cause harmful interference to radio communications. There is no guarantee that interference will not occur in a particular installation.

The vendor makes no representations or warranties with respect to the contents here and specially disclaims any implied warranties of merchantability or fitness for any purpose. Further the vendor reserves the right to revise this publication and to make changes to the contents here without obligation to notify any party beforehand.

Duplication of this publication, in part or in whole, is not allowed without first obtaining the vendor's approval in writing.

The content of this user's manual is subject to be changed without notice and we will not be responsible for any mistakes found in this user's manual. All the brand and product names are trademarks of their respective companies.

Dichiarazione di conformità sintetica

Ai sensi dell'art. 2 comma 3 del D.M. 275 del 30/10/2002

Si dichiara che questo prodotto è conforme alle normative vigenti e soddisfa i requisiti essenziali richiesti dalle direttive

2004/108/CE, 2006/95/CE e 1999/05/CE

quando ad esso applicabili

Short Declaration of conformity

We declare this product is complying with the laws in force and meeting all the essential requirements as specified by the directives

2004/108/CE, 2006/95/CE and 1999/05/CE

whenever these laws may be applied

Table of Contents

CHAPTER 1: INTRODUCTION

1.1 Before You Start

Thank you for choosing our product. Before you start installing the motherboard, please make sure you follow the instructions below:

- Prepare a dry and stable working environment with sufficient lighting.
- Always disconnect the computer from power outlet before operation.
- Before you take the motherboard out from anti-static bag, ground yourself properly by touching any safely grounded appliance, or use grounded wrist strap to remove the static charge.
- Avoid touching the components on motherboard or the rear side of the board unless necessary. Hold the board on the edge, do not try to bend or flex the board.
- Do not leave any unfastened small parts inside the case after installation. Loose parts will cause short circuits which may damage the equipment.
- Keep the computer from dangerous area, such as heat source, humid air and water.
- The operating temperatures of the computer should be 0 to 45 degrees Celsius.
- To avoid injury, be careful of:
  Sharp pins on headers and connectors
  Rough edges and sharp corners on the chassis
  Damage to wires that could cause a short circuit

1.2 Package Checklist

- ☑ Serial ATA Cable x2
- ☑ Rear I/O Panel for ATX Case x1
- ☑ Quick Installation Guide x1
- ☑ Fully Setup Driver DVD x1

Note: The package contents may be different due to the sales region or models in which it was sold. For more information about the standard package in your region, please contact your dealer or sales representative.

1.3 Motherboard Features

SPEC			
CPU	Socket 1155 Intel Core i7 / i5 / i3 / Pentium / Celeron processor		Supports Execute Disable Bit / Enhanced Intel SpeedStep® / Intel Architecture-64 / Extended Memory 64 Technology / Virtualization Technology / Hyper Threading
Chipset	Intel H61		
Super I/O	IT8728 Provides the most commonly used legacy Super I/O functionality Low Pin Count Interface		Environment Control initiatives Hardware Monitor Controller Fan Speed Controller ITE's "Smart Guardian" function
Main Memory	DDR3 DIMM Slots x 2 Max Memory Capacity 16GB Each DIMM supports 512MB/ 1GB/2GB/4GB/8GB DDR3		Dual Channel Mode DDR3 memory module Supports DDR3 1066 / 1333 / 1600 (depending on CPU) Registered DIMM and ECC DIMM is not supported
SATA 2	Integrated Serial ATA Controller		Data transfer rates up to 3.0 Gb/s SATA Version 2.0 specification compliant
LAN	RTL8111G (H61MHP & H61MGP & H61MGP2) 10 / 100 /1000Mb/s auto negotiation Half / Full duplex capability RTL8106E (H61MLP) 10 / 100 Mb/s auto negotiation Half / Full duplex capability		
Sound Codec	ALC662		5.1 channels audio out High Definition Audio
Slots	PCI-E Gen3x16 slot	x1	Supports PCI-E Gen2/3 x16 expansion card(depending on CPU)
	PCI-E Gen2 x1 slot	x1	Supports PCI-E Gen2 x1 expansion card
	PCI slot	x1	Supports PCI expansion card
On Board Connectors	SATA2 Connector	x4	Each connector supports 1 SATA2 device
	Front Panel Connector	x1	Supports front panel facilities
	Front Audio Connector	x1	Supports front panel audio function
	CPU Fan Header	x1	CPU Fan power supply (with Smart Fan function)
	System Fan Header	x1	System Fan Power supply
	Clear CMOS Header	x1	Restore CMOS data to factory default
	USB2.0 Connector	x2	Each connector supports 2 front panel USB2.0 ports
	Power Connector (24pin)	x1	Connects to Power supply
	Power Connector (4pin)	x1	Connects to Power supply
Rear Panel I/O	PS/2 Keyboard	x1	Connects to PS/2 Keyboard
	PS/2 Mouse	x1	Connects to PS/2 Mouse
	VGA Port	x1	Connect to D-SUB monitor
	HDMI Port	x1	Connect to HDMI monitor (only for H61MHP)
	Serial Port	x1	Provide RS-232 Serial connection
	Printer Port	x1	Provide 1 connection for printer (except H61MGP2)
	LAN port	x1	Connect to RJ-45 Ethernet cable
	USB2.0 Port	x4	Connect to USB2.0 devices
	Audio Jack	x3	Provide Audio-In/Out and Mic. connection
Board Size	174 (W) x 235 (L) mm		uATX
OS Support	Windows XP / Vista / 7 / 8		Biostar reserves the right to add or remove support for any OS with or without notice

1.4 Rear Panel Connectors

H61MHP

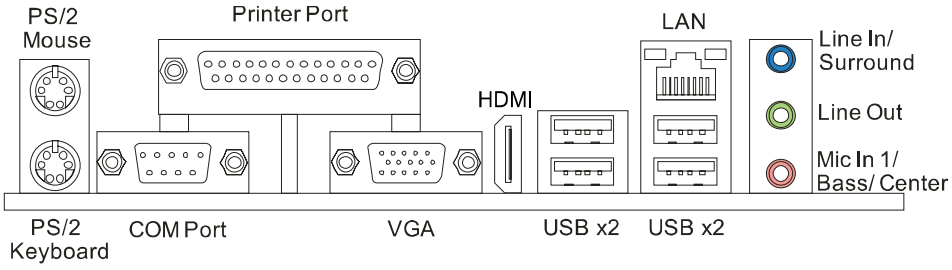

H61MGP & H61MLP

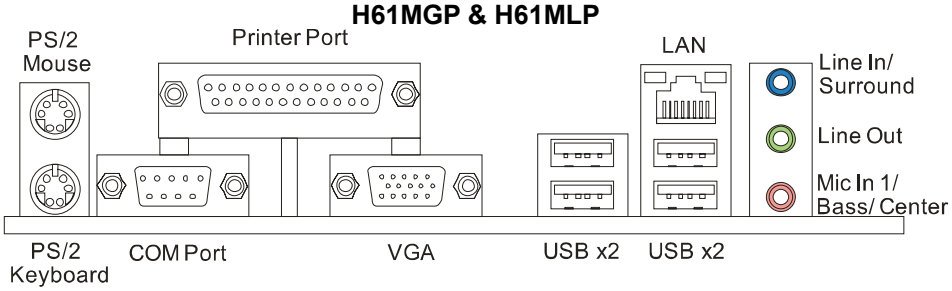

H61MGP2

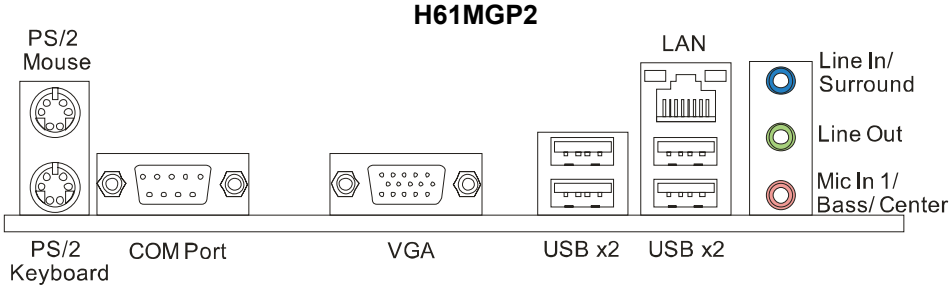

Note 1: HDMI & VGA Output require an Intel Core family processor with Intel Graphics Technology.

Note 2: Since the audio chip supports High Definition Audio Specification, the function of each audio jack can be defined by software. The input / output function of each audio jack listed above represents the default setting. However, when connecting external microphone to the audio port, please use the Line In (Blue) and Mic In (Pink) audio jack.

Note 3: **Maximum resolution:**
HDMI: 1920 x 1200 @60Hz
VGA: 2048 x 1536 @75Hz

1.5 Motherboard Layout

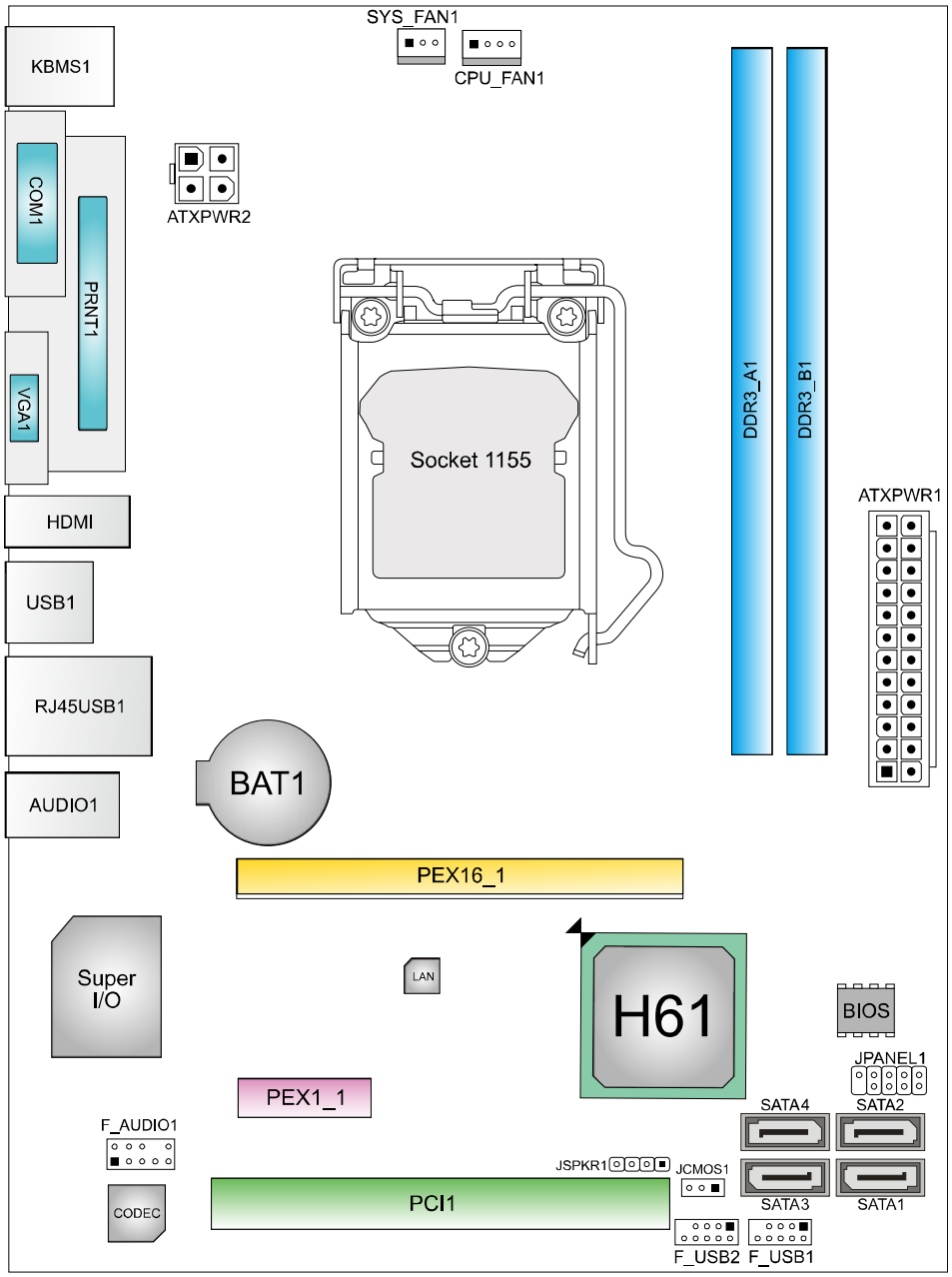

Note: ■ represents the 1st pin.

CHAPTER 2: HARDWARE INSTALLATION

2.1 Installing Central Processing Unit (CPU)

Step 1: Locate the CPU socket on the motherboard

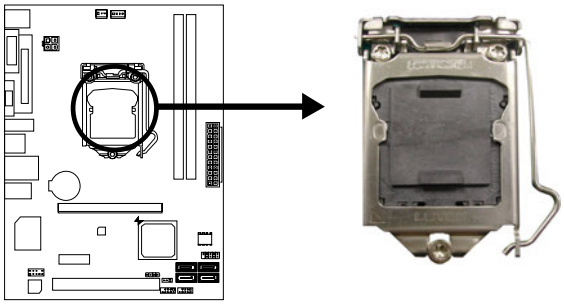

Note1: Remove Pin Cap before installation, and make good preservation for future use. When the CPU is removed, cover the Pin Cap on the empty socket to ensure pin legs won't be damaged.
Note2: The motherboard might equip with two different types of pin cap. Please refer below instruction to remove the pin cap.

Step 2: Pull the socket locking lever out from the socket then raise the lever and load plate to the fully open position.

Type A

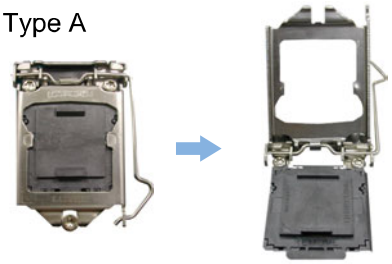

Type B

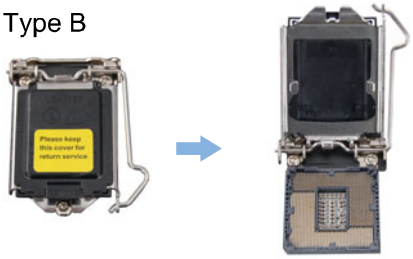

Step 3: Remove the Pin Cap.

Type A

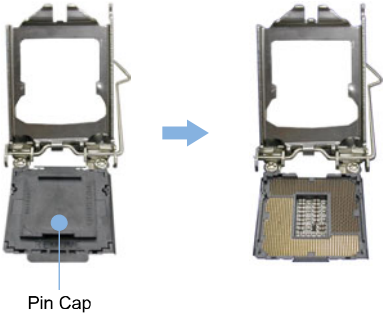

Type B

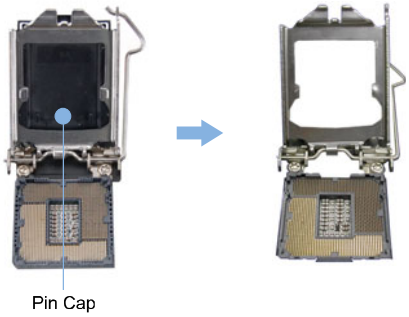

Step 4: Hold processor with your thumb and index fingers, oriented as shown. Align the notches with the socket. Lower the processor straight down without tilting or sliding the processor in the socket.

Step 5: Close the load plate. Pressing down on the load plate, close and engage the socket lever.

2.2 Install a Heatsink

Step 1: Place the CPU fan assembly on top of the installed CPU and make sure that the four fasteners match the motherboard holes. Orient the assembly and make the fan cable is closest to the CPU fan connector.
Ensure the fastener slots are pointing perpendicular to the heatsink.

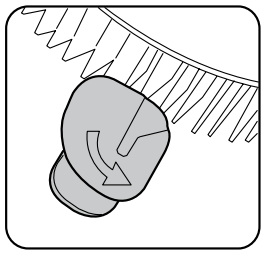

Correct Orientation

Step 2: Press down two fasteners at one time in a diagonal sequence to secure the CPU fan assembly in place. As each fastener locks into position a click should be heard.

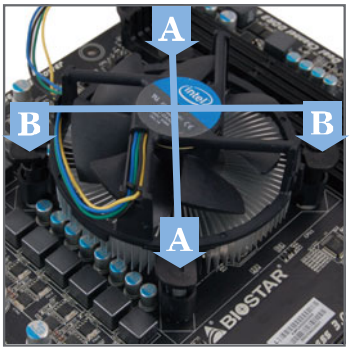

Note1: Do not forget to connect the CPU fan connector.
Note2: For proper installation, please kindly refer to the installation manual of your CPU heatsink.

2.3 Fan Headers

These fan headers support cooling-fans built in the computer. The fan cable and connector may be different according to the fan manufacturer. Connect the fan cable to the connector while matching the black wire to pin#1.

CPU_FAN1: CPU Fan Header

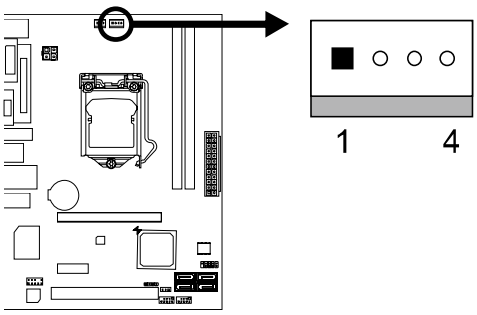

Pin	Assignment
1	Ground
2	+12V
3	FAN RPM rate sense
4	Smart Fan Control

SYS_FAN1: System Fan Header

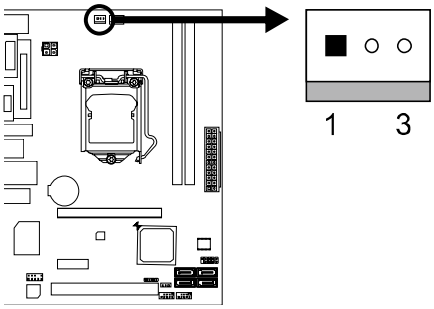

Pin	Assignment
1	Ground
2	+12V
3	FAN RPM rate sense

Note: CPU_FAN1, SYS_FAN1 support 4-pin and 3-pin head connectors. When connecting with wires onto connectors, please note that the red wire is the positive and should be connected to pin#2, and the black wire is Ground and should be connected to pin#1(GND).

2.4 Installing System Memory

DDR3 Modules

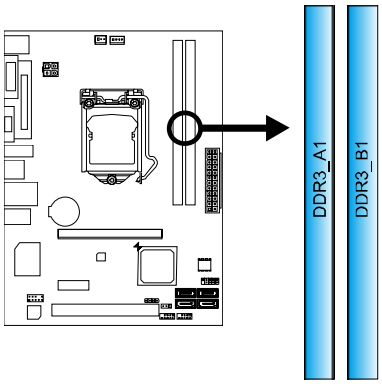

Step 1: Unlock a DIMM slot by pressing the retaining clips outward. Align a DIMM on the slot such that the notch on the DIMM matches the break on the slot.

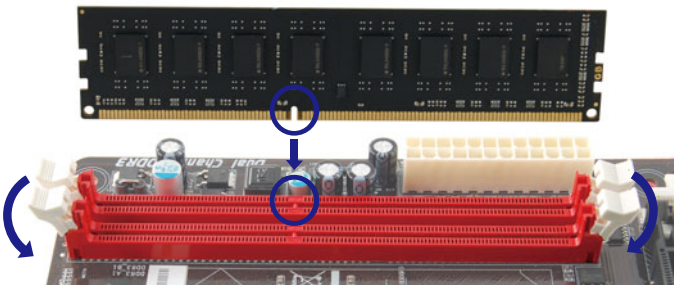

Step 2: Insert the DIMM vertically and firmly into the slot until the retaining clips snap back in place and the DIMM is properly seated.

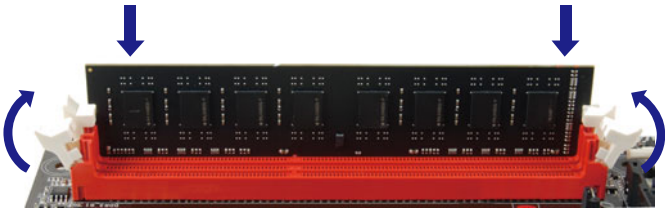

Note: If the DIMM does not go in smoothly, do not force it. Pull it all the way out and try again.

Memory Capacity

DIMM Socket Location	DDR3 Module	Total Memory Size
DDR3_A1	512MB/1GB/2GB/4GB/8GB	Max is 16GB.
DDR3_B1	512MB/1GB/2GB/4GB/8GB	

Dual Channel Memory Installation

Please refer to the following requirements to activate Dual Channel function:

Install memory module of the same density in pairs, shown in the table.

Dual Channel Status	DDR3_A1	DDR3_B1
Disabled	O	X
Disabled	X	O
Enabled	O	O

(O means memory installed, X means memory not installed.)

Note: The DRAM bus width of the memory module must be the same (x8 or x16)

2.5 Expansion Slots

Install an Expansion Card

You can install your expansion card by following steps:

1. Read the related expansion card's instruction document before install the expansion card into the computer.
2. Remove your computer's chassis cover, screws and slot bracket from the computer.
3. Place a card in the expansion slot and press down on the card until it is completely seated in the slot.
4. Secure the card's metal bracket to the chassis back panel with a screw.
5. Replace your computer's chassis cover.
6. Power on the computer, if necessary, change BIOS settings for the expansion card.
7. Install related driver for the expansion card.

PEX16_1: PCI-Express Gen3 x16 Slot

- PCI-Express 3.0 compliant.
- Maximum theoretical realized bandwidth of 16GB/s simultaneously per direction, for an aggregate of 32GB/s totally.
- PCI-E 3.0 is supported by Core i7-3xxx / i5-3xxx CPU.

PEX1_1/ PEX1_2: PCI-Express Gen2 x1 Slot

- PCI-Express 2.0 compliant.
- Data transfer bandwidth up to 500MB/s per direction; 1GB/s in total.
- PCI-Express supports a raw bit-rate of 5.0Gb/s on the data pins.

PCI1: Peripheral Component Interconnect Slot

This motherboard is equipped with 1 standard PCI slots. PCI stands for Peripheral Component Interconnect, and it is a bus standard for expansion cards. This PCI slot is designated as 32 bits.

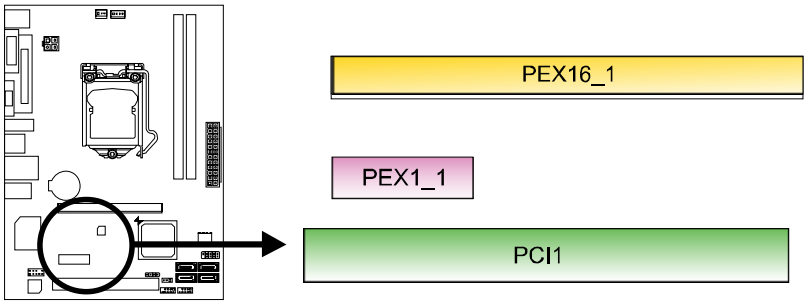

2.6 Jumper Setting

The illustration shows how to set up jumpers. When the jumper cap is placed on pins, the jumper is “close”, if not, that means the jumper is “open”.

Pin opened **Pin closed** **Pin1-2 closed**

JCMOS1: Clear CMOS Header

Placing the jumper on pin2-3 allows user to restore the BIOS safe setting and the CMOS data. Please carefully follow the procedures to avoid damaging the motherboard.

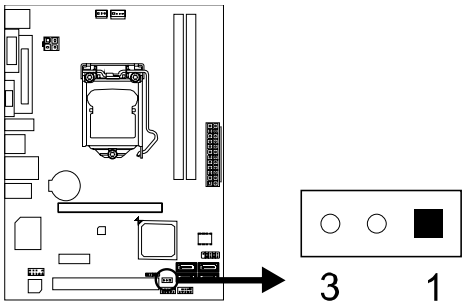

Pin 1-2 Close:
Normal Operation (default).

Pin 2-3 Close:
Clear CMOS data.

※ Clear CMOS Procedures:

1. Remove AC power line.
2. Set the jumper to “Pin 2-3 close”.
3. Wait for five seconds.
4. Set the jumper to “Pin 1-2 close”.
5. Power on the AC.
6. Load Optimal Defaults and save settings in CMOS.

2.7 Headers & Connectors

ATXPWR2: ATX Power Source Connector

This connector provides +12V to CPU power circuit.

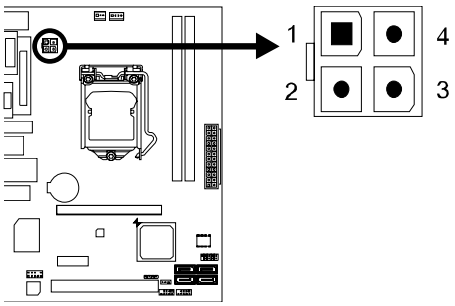

Pin	Assignment
1	+12V
2	+12V
3	Ground
4	Ground

ATXPWR1: ATX Power Source Connector

For better compatibility, we recommend to use a standard ATX 24-pin power supply for this connector. Make sure to find the correct orientation before plugging the connector.

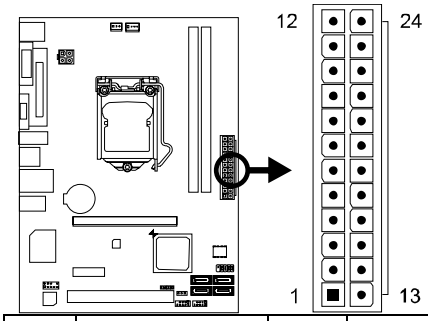

Pin	Assignment	Pin	Assignment
13	+3.3V	1	+3.3V
14	-12V	2	+3.3V
15	Ground	3	Ground
16	PS_ON	4	+5V
17	Ground	5	Ground
18	Ground	6	+5V
19	Ground	7	Ground
20	NC	8	PW_OK
21	+5V	9	Standby Voltage+5V
22	+5V	10	+12V
23	+5V	11	+12V
24	Ground	12	+3.3V

SATA1~SATA4: Serial ATA Connectors

The motherboard has a PCI to SATA Controller with 4 channels SATA2 interface, it satisfies the SATA 2.0 spec and with transfer rate of 3.0Gb/s.

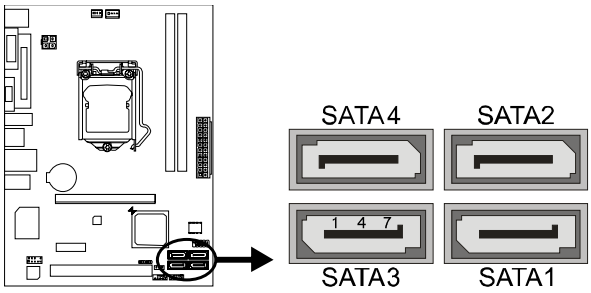

Pin	Assignment
1	Ground
2	TX+
3	TX-
4	Ground
5	RX-
6	RX+
7	Ground

JPANEL1: Front Panel Header

This connector includes Power-on, Reset, HDD LED and Power LED connections. It allows user to connect the PC case's front panel switch functions.

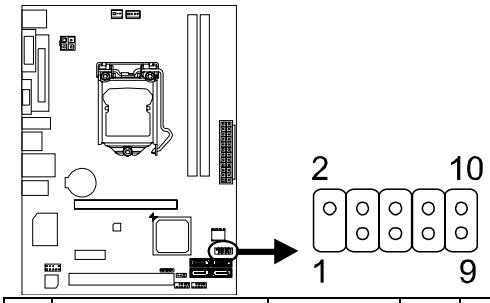

Pin	Assignment	Function	Pin	Assignment	Function
1	N/A	N/A	2	Power LED (+)	Power LED
3	HDD LED(+)	HDD LED	4	Power LED (+)	
5	HDD LED(-)		6	Power LED (-)	
7	Ground	Reset Button	8	Power Button	Power-On Button
9	Reset Control		10	Ground	

JSPKR1: Chassis Speaker Header

Please connect the chassis speaker to this header.

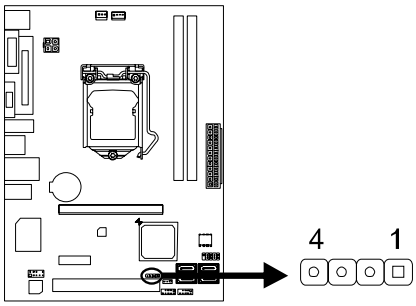

Pin	Assignment
1	+5V
2	N/A
3	N/A
4	Speaker

F_USB1/F_USB2: Headers for USB 2.0 Ports at Front Panel

These headers allow user to connect additional USB cable on the PC front panel, and also can be connected with internal USB devices, like USB card reader.

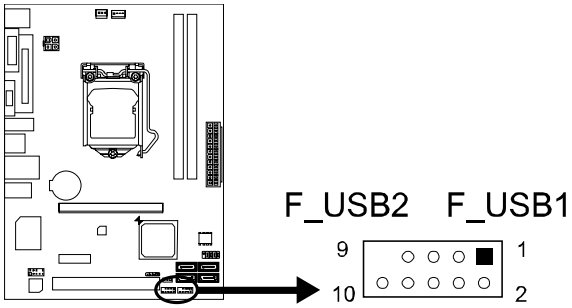

Pin	Assignment
1	+5V (fused)
2	+5V (fused)
3	USB-
4	USB-
5	USB+
6	USB+
7	Ground
8	Ground
9	Key
10	NC

F_AUDIO1: Front Panel Audio Header

This header allows user to connect the chassis-mount front panel audio I/O which supports HD and AC'97 audio standards.

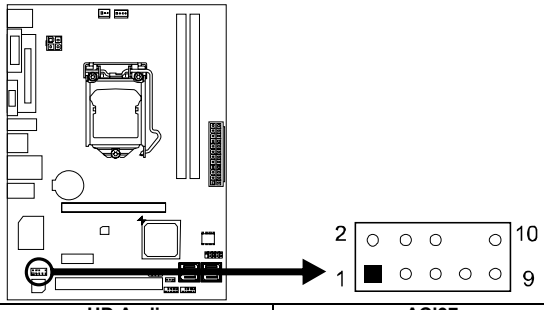

HD Audio		AC'97	
Pin	**Assignment**	**Pin**	**Assignment**
1	Mic Left in	1	Mic In
2	Ground	2	Ground
3	Mic Right in	3	Mic Power
4	GPIO	4	Audio Power
5	Right line in	5	RT Line Out
6	Jack Sense	6	RT Line Out
7	Front Sense	7	Reserved
8	Key	8	Key
9	Left line in	9	LFT Line Out
10	Jack Sense	10	LFT Line Out

Note1: It is recommended that you connect a high-definition front panel audio module to this connector to avail of the motherboard's high definition audio capability.
Note2: Please try to disable the "Front Panel Jack Detection" if you want to use an AC'97 front audio output cable. The function can be found via O.S. Audio Utility.

CHAPTER 3: USEFUL HELP

3.1 Driver Installation Note

After you installed your operating system, please insert the Fully Setup Driver CD into your optical drive and install the driver for better system performance.

You will see the following window after you insert the CD

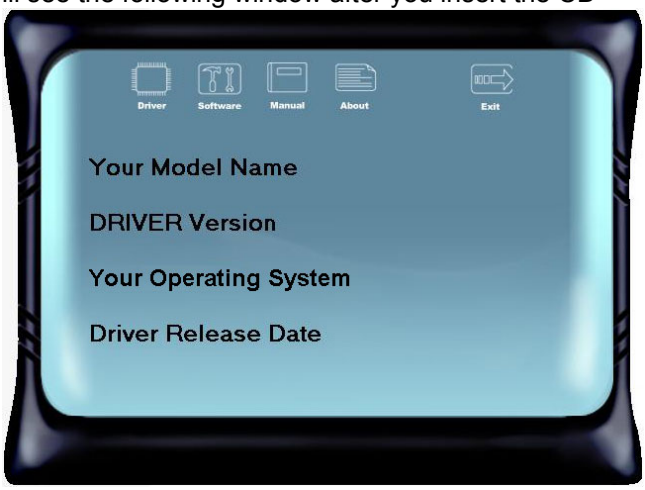

The setup guide will auto detect your motherboard and operating system.

A. Driver Installation

To install the driver, please click on the Driver icon. The setup guide will list the compatible driver for your motherboard and operating system. Click on each device driver to launch the installation program.

B. Software Installation

To install the software, please click on the Software icon. The setup guide will list the software available for your system, click on each software title to launch the installation program.

C. Manual

Aside from the paperback manual, we also provide manual in the Driver DVD. Click on the Manual icon to browse for available manual.

Note1: If this window didn't show up after you insert the Driver DVD, please use file browser to locate and execute the file SETUP.EXE under your optical drive.
Note2: You will need Acrobat Reader to open the manual file. Please download the latest version of Acrobat Reader software from http://get.adobe.com/reader/

3.2 Software

Installing Software

1. Insert the Setup DVD to the optical drive. The driver installation program would appear if the Auto-run function has been enabled.
2. Select **Software Installation**, and then click on the respective software title.
3. Follow the on-screen instructions to complete the installation.

Launching Software

After the installation process is completed, you will see the software icon showing on the desktop. Double-click the icon to launch it.

Note1: All the information and content about following software are subject to be changed without notice. For better performance, the software is being continuously updated.

Note2: The information and pictures described below are for your reference only. The actual information and settings on board may be slightly different from this manual.

BIOS Update Utility (through the Internet)

1. Installing BIOS Update Utility from the DVD Driver.
2. Please make sure the system is connected to the internet before using this function.

3. Launch BIOS Update Utility and click the **Online Update** button on the main screen.

4. An open dialog will show up to request your agreement to start the BIOS update. Click **Yes** to start the online update procedure.

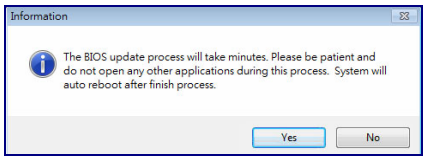

5. If there is a new BIOS version, the utility will ask you to download it. Click **Yes** to proceed.

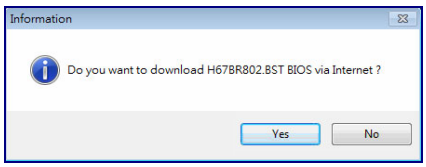

6. After the download is completed, you will be asked to program (update) the BIOS or not. Click **Yes** to proceed.

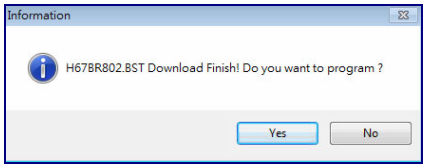

7. After the updating process is finished, you will be asked you to reboot the system. Click **OK** to reboot.

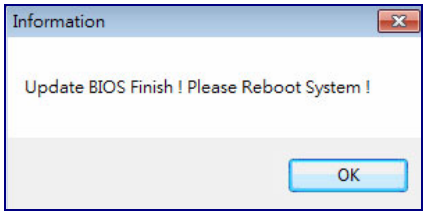

8. While the system boots up and the full screen logo shows up, press <DEL> key to enter BIOS setup.
   After entering the BIOS setup, please go to the **Save & Exit**, using the **Restore Defaults** function to load Optimized Defaults, and select **Save Changes and Reset** to restart the computer. Then, the BIOS Update is completed.

BIOS Update Utility (through a BIOS file)

1. Installing BIOS Update Utility from the DVD Driver.
2. Download the proper BIOS from http://www.biostar.com.tw/

3. Launch BIOS Update Utility and click the **Update BIOS** button on the main screen.

4. A warning message will show up to request your agreement to start the BIOS update. Click **OK** to start the update procedure.

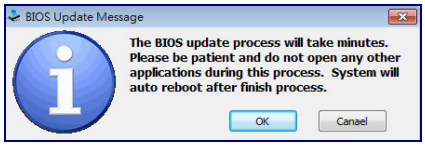

5. Choose the location for your BIOS file in the system. Please select the proper BIOS file, and then click on **Open**. It will take several minutes, please be patient.

6. After the BIOS Update process is finished, click on **OK** to reboot the system.

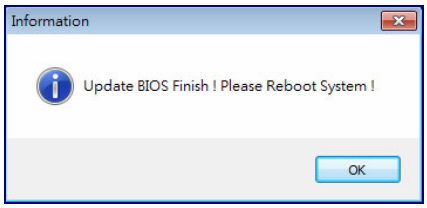

7. While the system boots up and the full screen logo shows up, press <DEL> key to enter BIOS setup.
   After entering the BIOS setup, please go to the **Save & Exit**, using the **Restore Defaults** function to load Optimized Defaults, and select **Save Changes and Reset** to restart the computer. Then, the BIOS Update is completed.

Backup BIOS

Click the Backup BIOS button on the main screen for the backup of BIOS, and select a proper location for your backup BIOS file in the system, and click **Save**.

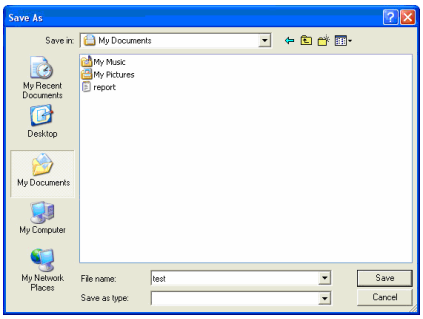

BIOSTAR BIOS Flasher

BIOSTAR BIOS Flasher is a BIOS flashing utility providing you an easy and simple way to update your BIOS via USB pen drive.

Note1: This utility only allows storage device with FAT32/16 format and single partition.

Note2: Shutting down or resetting the system while updating the BIOS will lead to system boot failure.

Updating BIOS with BIOSTAR BIOS Flasher

1. Go to the website to download the latest BIOS file for the motherboard.
2. Then, copy and save the BIOS file into a USB flash (pen) drive.

3. Insert the USB pen drive that contains the BIOS file to the USB port.
4. Power on or reset the computer and then press <F12> during the POST process.

5. After entering the POST screen, the BIOS-FLASHER utility pops out. Choose [fs0] to search for the BIOS file.

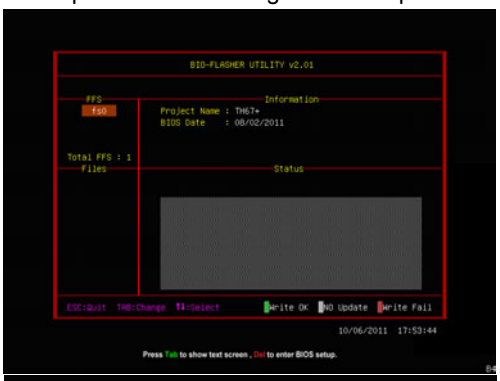

6. Select the proper BIOS file, and a message asking if you are sure to flash the BIOS file. Click Yes to start updating BIOS.

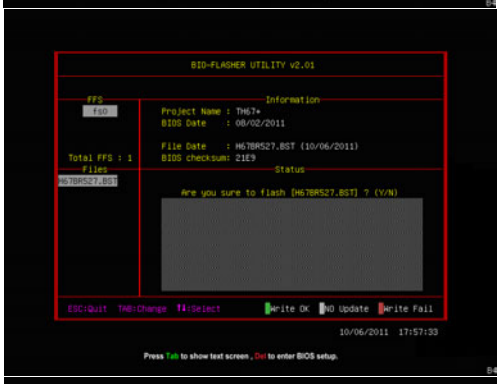

7. A dialog pops out after BIOS flash is completed, asking you to restart the system. Press the [Y] key to restart system.

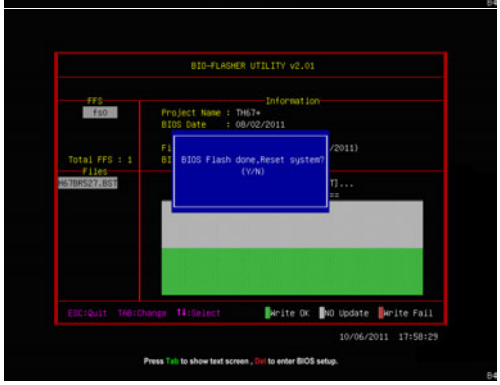

8. While the system boots up and the full screen logo shows up, press <DEL> key to enter BIOS setup.
   After entering the BIOS setup, please go to the **Save & Exit**, using the **Restore Defaults** function to load Optimized Defaults, and select **Save Changes and Reset** to restart the computer. Then, the BIOS Update is completed.

eHot-Line

eHot-Line is a convenient utility that helps you to contact with our Tech-Support system. This utility will collect the system information which is useful for analyzing the problem you may have encountered, and then send these information to our tech-support department to help you fix the problem.

Note: Before you use this utility, please set Outlook Express as your default e-mail client application program.

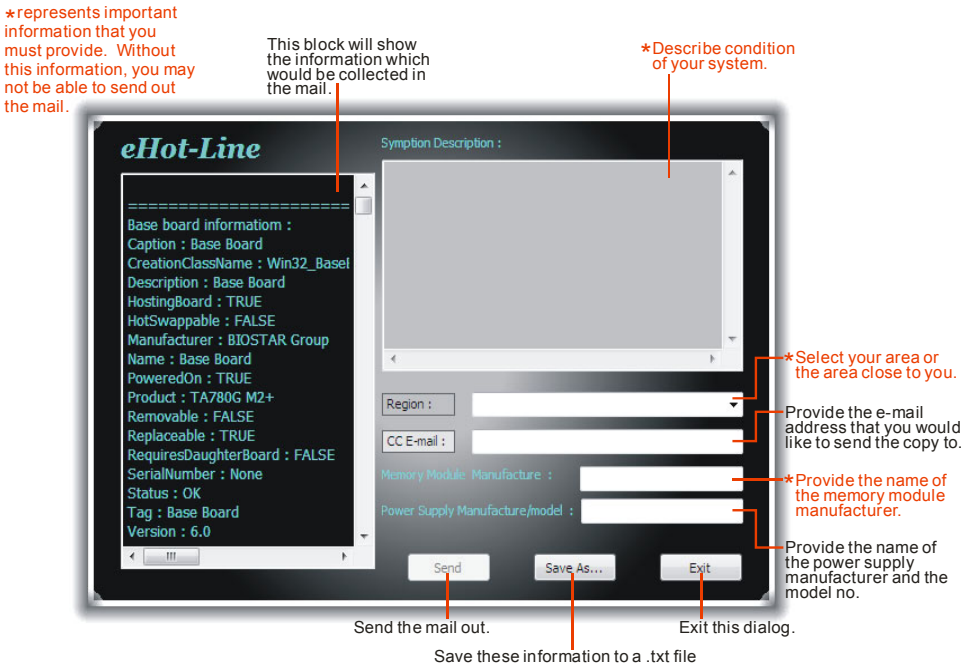

After filling up this information, click "**Send**" to send the mail out. A warning dialog would appear asking for your confirmation; click "**Send**" to confirm or "**Do Not Send**" to cancel.

If you want to save this information to a .txt file, click "**Save As…**" and then you will see a saving dialog appears asking you to enter file name.

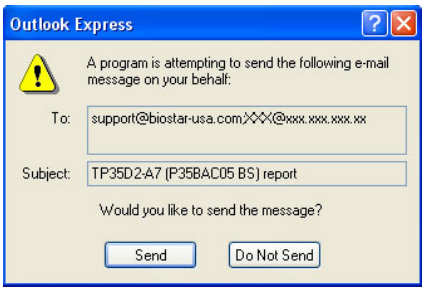

Enter the file name and then click "**Save**". Your system information will be saved to a .txt file.

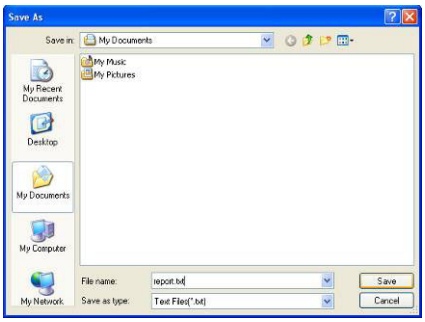

Open the saved .txt file, you will see your system information including motherboard/BIOS/CPU/video/ device/OS information. This information is also concluded in the sent mail.

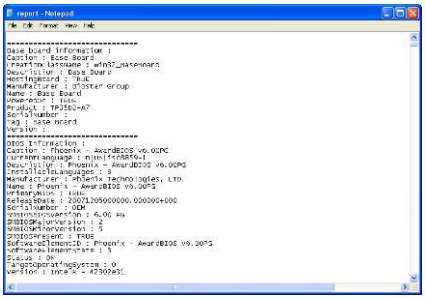

Note1: We will not share customer's data with any other third parties, so please feel free to provide your system information while using eHot-Line service.

Note2: If you are not using Outlook Express as your default e-mail client application, you may need to save the system information to a .txt file and send the file to our tech support with other e-mail application. Go to the following website http://www.biostar.com.tw/app/en/about/contact.php for getting our contact information.

BIOScreen Utility

This utility allows you to personalize your boot logo easily. You can choose BMP as your boot logo so as to customize your computer.

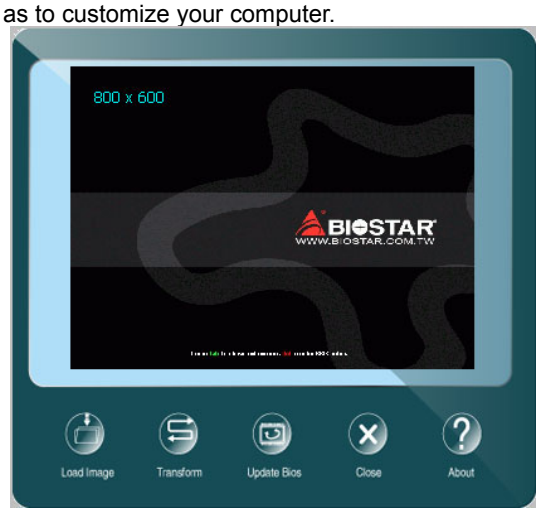

Please follow the step-by-step instructions below to update boot logo:

- Load Image：Choose the picture as the boot logo.
- Transform：Transform the picture for BIOS and preview the result.
- Update Bios：Write the picture to BIOS Memory to complete the update.

3.3 Extra Information

CPU Overheated

If the system shutdown automatically after power on system for seconds, that means the CPU protection function has been activated.

When the CPU is over heated, the motherboard will shutdown automatically to avoid a damage of the CPU, and the system may not power on again.

In this case, please double check:

1. The CPU cooler surface is placed evenly with the CPU surface.
2. CPU fan is rotated normally.
3. CPU fan speed is fulfilling with the CPU speed.

After confirmed, please follow steps below to relief the CPU protection function.

1. Remove the power cord from power supply for seconds.
2. Wait for seconds.
3. Plug in the power cord and boot up the system.

Or you can:

1. Clear the CMOS data.
2. Wait for seconds.
3. Power on the system again.

3.4 AMI BIOS Beep Code

Boot Block Beep Codes

Number of Beeps	Description
Continuing	Memory sizing error or Memory module not found

POST BIOS Beep Codes

Number of Beeps	Description
1	Success booting.
8	Display memory error (system video adapter)

3.5 Troubleshooting

Probable	Solution
1. There is no power in the system. Power LED does not shine; the fan of the power supply does not work 2. Indicator light on keyboard does not shine.	1. Make sure power cable is securely plugged in. 2. Replace cable. 3. Contact technical support.
System is inoperative. Keyboard lights are on, power indicator lights are lit, and hard drives are running.	Using even pressure on both ends of the DIMM, press down firmly until the module snaps into place.
System does not boot from a hard disk drive, but can be booted from optical drive.	1. Check cable running from disk to disk controller board. Make sure both ends are securely plugged in; check the drive type in the standard CMOS setup. 2. Backing up the hard drive is extremely important. All hard disks are capable of breaking down at any time.
System only boots from an optical drive. Hard disks can be read, applications can be used, but system fails to boot from a hard disk.	1. Back up data and applications files. 2. Reformat the hard drive. Re-install applications and data using backup disks.
Screen message shows “Invalid Configuration” or “CMOS Failure.”	Review system’s equipment. Make sure correct information is in setup.
System cannot boot after user installs a second hard drive.	1. Set master/slave jumpers correctly. 2. Run SETUP program and select correct drive types. Call the drive manufacturers for compatibility with other drives.

APPENDIX: SPEC IN OTHER LANGUAGES

German

Spezifikationen			
CPU	Socket 1155 Intel Core i7 / i5 / i3 / Pentium / Celeron Prozessoren		Unterstützt Execute Disable Bit / Enhanced Intel SpeedStep® / Intel Architecture-64 / Extended Memory 64 Technology / Virtualization Technology / Hyper Threading
Chipsatz	Intel H61		
Super E/A	IT8728 Bietet die häufig verwendeten alten Super E/A-Funktionen. Low Pin Count-Schnittstelle		Umgebungskontrolle, Hardware-Überwachung Lüfterdrehzahl-Controller/-Überwachung "Smart Guardian"-Funktion von ITE
Arbeitsspeicher	DDR3 DIMM-Steckplätze x 2 Max. 16GB Arbeitsspeicher Jeder DIMM unterstützt 512MB/ 1GB/2GB/4GB/8GB DDR3.		Dual-Kanal DDR3 Speichermodul Unterstützt DDR3 1066 / 1333 / 1600 registrierte DIMMs. ECC DIMMs werden nicht unterstützt.
SATA 2	Integrierter Serial ATA-Controller		Datentransferrate bis zu 3.0Gb/s Konform mit der SATA-Spezifikation Version 2.0
LAN	RTL8111G (H61MHP & H61MGP & H61MGP2) 10/100/1000 Mb/s Auto-Negotiation Halb-/ Vollduplex-Funktion RTL8106E (H61MLP) 10/100 Mb/s Auto-Negotiation Halb-/ Vollduplex-Funktion		
HD Audio-Unterstützung	ALC662		Unterstützt High-Definition Audio 5.1-Kanal-Audioausgabe
Steckplätze	PCI Express Gen2 x16 Steckplatz PCI Express Gen2 x1 Steckplatz PCI Steckplatz	x1 x1 x1	(je nach CPU)
Onboard-Anschluss	SATA2-Anschluss	x4	Jeder Anschluss unterstützt 1 SATA2-Laufwerk
	Fronttafelanschluss	x1	Unterstützt die Fronttafelfunktionen
	Front-Audioanschluss	x1	Unterstützt die Fronttafel-Audioanschlussfunktion
	CPU-Lüfter-Sockel	x1	CPU-Lüfterstromversorgungsanschluss (mit Smart Fan-Funktion)
	System-Lüfter-Sockel	x1	System-Lüfter-Stromversorgungsanschluss
	"CMOS löschen"-Sockel	x1	
	USB2.0-Anschluss	x2	Jeder Anschluss unterstützt 2 Fronttafel-USB2.0-Anschlüsse
	Stromanschluss (24-polig)	x1	
	Stromanschluss (4-polig)	x1	
Rückseiten-E/A	PS/2-Tastatur PS/2-Maus VGA-Anschluss	x1 x1 x1	

Spezifikationen			
	HDMI-Anschluss	x1	(only for H61MHP)
	Serieller Anschluss	x1	
	Druckeranschluss	x1	(except H61MGP2)
	LAN-Anschluss	x1	
	USB2.0-Anschluss	x4	
	Audioanschluss	x3	
Platinengröße	174 mm (B) X 235 mm (L)		
OS-Unterstützung	Windows XP / Vista / 7 / 8		Biostar behält sich das Recht vor, ohne Ankündigung die Unterstützung für ein Betriebssystem hinzuzufügen oder zu entfernen.

French

SPEC			
UC	Socket 1155 Processeurs Intel Core i7 / i5 / i3 / Pentium / Celeron		Prend en charge les technologies d'exécution de bit de désactivation / Intel SpeedStep® optimisée/ d'architecture Intel 64 / de mémoire étendue 64 / de virtualisation / Hyper Threading
Chipset	Intel H61		
Super E/S	IT8728 Fournit la fonctionnalité de Super E/S patrimoniales la plus utilisée. Interface à faible compte de broches		Initiatives de contrôle environnementales, Moniteur de matériel Contrôleur /moniteur de vitesse de ventilateur Fonction "Gardien intelligent" de l'ITE
Mémoire principale	Fentes DDR3 DIMM x 2 Capacité mémoire maximale de 16 Go Chaque DIMM prend en charge des DDR3 de 512Mo/1Go/2Go/4Go/8Go		Module de mémoire DDR3 à mode à double voie Prend en charge la DDR3 1066 / 1333 / 1600 Les DIMM à registres et DIMM avec code correcteurs d'erreurs ne sont pas prises en charge
SATA 2	Contrôleur Serial ATA intégré		Taux de transfert jusqu'à 3.0Go/s. Conforme à la spécification SATA Version 2.0
LAN	RTL8111G (H61MHP & H61MGP & H61MGP2) 10/100/1000 Mb/s négociation automatique Half / Full duplex capability RTL8106E (H61MLP) 10/100 Mb/s négociation automatique Half / Full duplex capability		
Prise en charge audio HD	ALC662		Prise en charge de l'audio haute définition Sortie audio à 5.1 voies
Fentes	Fente PCI Express Gen2 x16 Fente PCI Express Gen2 x1 Fente PCI	x1 x1 x1	(en fonction du CPU)
Connecteur embarqué	Connecteur SATA2	x4	Chaque connecteur prend en charge 1 périphérique SATA2
	Connecteur du panneau avant	x1	Prend en charge les équipements du panneau avant
	Connecteur Audio du panneau avant x1		Prend en charge la fonction audio du panneau avant
	Embase de ventilateur UC	x1	Alimentation électrique du ventilateur UC (avec fonction de ventilateur intelligent)
	Embase de ventilateur système	x1	Alimentation électrique du ventilateur système
	Embase d'effacement CMOS	x1	
	Connecteur USB2.0 Connecteur d'alimentation (24 broches)	x2 x1	Chaque connecteur prend en charge 2 ports USB2.0 de panneau avant
	Connecteur d'alimentation (4 broches)	x1	
E/S du panneau	Clavier PS/2 Souris PS/2	x1 x1	

SPEC			
arrière	Port VGA	x1	
	Port HDMI	x1	(only for H61MHP)
	Port série	x1	
	Port d'imprimante	x1	(except H61MGP2)
	Port LAN	x1	
	Port USB2.0	x4	
	Fiche audio	x3	
Dimensions de la carte	174 mm (l) X 235 mm (H)		
Support SE	Windows XP / Vista / 7 / 8		Biostar se réserve le droit d'ajouter ou de supprimer le support de SE avec ou sans préavis

Italian

SPECIFICA		
CPU	Socket 1155 Processore Intel Core i7 / i5 / i3 / Pentium / Celeron	Supporto di Execute Disable Bit / Enhanced Intel SpeedStep® / Architettura Intel 64 / Tecnologia Extended Memory 64 / Tecnologia Virtualization / Hyper Threading
Chipset	Intel H61	
Super I/O	IT8728 Fornisce le funzionalità legacy Super I/O usate più comunemente. Interfaccia LPC (Low Pin Count)	Funzioni di controllo dell'ambiente: Monitoraggio hardware Controller / Monitoraggio velocità ventolina Funzione "Smart Guardian" di ITE
Memoria principale	Alloggi DIMM DDR3 x 2 Capacità massima della memoria 16GB Ciascun DIMM supporta DDR3 512MB/1GB/2GB/4GB/8GB	Modulo di memoria DDR3 a canale doppio Supporto di DDR3 1066 / 1333 / 1600 DIMM registrati e DIMM ECC non sono supportati
SATA 2	Controller Serial ATA integrato	Velocità di trasferimento dei dati fino a 3.0Gb/s. Compatibile specifiche SATA Versione 2.0
LAN	RTL8111G (H61MHP & H61MGP & H61MGP2) Negoziazione automatica 10/100/1000 Mb/s Capacità Half / Full Duplex RTL8106E (H61MLP) Negoziazione automatica 10/100 Mb/s Capacità Half / Full Duplex	
Supporto audio HD	ALC662	Supporto audio High-Definition (HD) Uscita audio 5.1 canali
Alloggi	Alloggio PCI Express Gen2 x16 x1 Alloggio PCI Express Gen2 x1 x1 Alloggio PCI x1	(a seconda del CPU)
Connettori su scheda	Connettore SATA2 x4	Ciascun connettore supporta 1 unità SATA2
	Connettore pannello frontale x1	Supporta i servizi del pannello frontale
	Connettore audio frontale x1	Supporta la funzione audio pannello frontale
	Collettore ventolina CPU x1	Alimentazione ventolina CPU (con funzione Smart Fan)
	Collettore ventolina sistema x1	Alimentazione ventolina di sistema
	Collettore cancellazione CMOS x1	
	Connettore USB2.0 x2	Ciascun connettore supporta 2 porte USB2.0 pannello frontale
	Connettore alimentazione (24 pin) x1	
	Connettore alimentazione (4 pin) x1	
I/O pannello posteriore	Tastiera PS/2 x1 Mouse PS/2 x1 Porta VGA x1	

SPECIFICA			
	Porta HDMI	x1	(only for H61MHP)
	Porta seriale	x1	
	Porta stampante	x1	(except H61MGP2)
	Porta LAN	x1	
	Porta USB2.0	x4	
	Connettore audio	x3	
Dimensioni scheda	174 mm (larghezza) x 235 mm (altezza)		
Sistemi operativi supportati	Windows XP / Vista / 7 / 8		Biostar si riserva il diritto di aggiungere o rimuovere il supporto di qualsiasi sistema operativo senza preavviso.

Spanish

Especificación			
CPU	Socket 1155 Procesador Intel Core i7 / i5 / i3 / Pentium / Celeron		Admite Bit de deshabilitación de ejecución / Intel SpeedStep® Mejorado / Intel Architecture-64 / Tecnología Extended Memory 64 / Tecnología de virtualización / Hyper Threading
Conjunto de chips	Intel H61		
Súper E/S	IT8728 Le ofrece las funcionalidades heredadas de uso más común Súper E/S. Interfaz de cuenta Low Pin		Iniciativas de control de entorno, Monitor hardware Controlador/monitor de velocidad de ventilador Función "Guardia inteligente" de ITE
Memoria principal	Ranuras DIMM DDR3 x 2 Capacidad máxima de memoria de 16GB Cada DIMM admite DDR de 512MB/1GB/2GB/4GB/8GB		Módulo de memoria DDR3 de canal Doble Admite DDR3 de 1066 / 1333 /1600 No admite DIMM registrados o DIMM compatibles con ECC
SATA 2	Controlador ATA Serie Integrado		Tasas de transferencia de hasta 3.0 Gb/s. Compatible con la versión SATA 2.0
Red Local	RTL8111G (H61MHP & H61MGP & H61MGP2) Negociación de 10/100/1000 Mb/s Funciones Half / Full dúplex RTL8106E (H61MLP) Negociación de 10/100 Mb/s Funciones Half / Full dúplex		
Soporte de sonido HD	ALC662		Soporte de sonido de Alta Definición Salida de sonido de 5.1 canales
Ranuras	Ranura PCI Express Gen2 x16 Ranura PCI express Gen2 x1 Ranura PCI	X1 X1 X1	(dependiendo de la CPU)
Conectores en placa	Conector SATA2	X4	Cada conector soporta 1 dispositivos SATA2
	Conector de panel frontal	X1	Soporta instalaciones en el panel frontal
	Conector de sonido frontal	X1	Soporta funciones de sonido en el panel frontal
	Cabecera de ventilador de CPU	X1	Fuente de alimentación de ventilador de CPU (con función Smart Fan)
	Cabecera de ventilador de sistema	X1	Fuente de alimentación de ventilador de sistema
	Cabecera de borrado de CMOS	X1	
	Conector USB2.0	X2	Cada conector soporta 2 puertos USB2.0 frontales
	Conector de alimentación (24 patillas) Conector de alimentación (4 patillas)	X1 X1	
Panel trasero de E/S	Teclado PS/2 Ratón PS/2 Puerto VGA	X1 X1 X1	

Especificación			
	Ratón HDMI	X1	(only for H61MHP)
	Puerto serie	X1	
	Puerto de impresora	X1	(except H61MGP2)
	Puerto de red local	X1	
	Puerto USB2.0	X4	
	Conector de sonido	X3	
Tamaño de la placa	174 mm. (A) X 235 Mm. (H)		
Soporte de sistema operativo	Windows XP / Vista / 7 / 8		Biostar se reserva el derecho de añadir o retirar el soporte de cualquier SO con o sin aviso previo.

Portuguese

ESPECIFICAÇÕES			
CPU	Socket 1155 Processador Intel Core i7 / i5 / i3 / Pentium / Celeron		Suporta as tecnologias Execute Disable Bit / Enhanced Intel SpeedStep® / Intel Arquitecture -64 / Extended Memory 64 / Virtualization / Hyper Threading
Chipset	Intel H61		
Especificação Super I/O	IT8728 Proporciona as funcionalidades mais utilizadas em termos da especificação Super I/O. Interface LPC (Low Pin Count).		Iniciativas para controlo do ambiente Monitorização do hardware Controlador/Monitor da velocidade da ventoinha Função "Smart Guardian" da ITE
Memória principal	Ranhuras DIMM DDR3 x 2 Capacidade máxima de memória: 16 GB Cada módulo DIMM suporta uma memória DDR3 de 512MB/ 1GB/2GB/4GB/8GB		Módulo de memória DDR3 de canal duplo Suporta módulos DDR3 1066 / 1333 /1600 Os módulos DIMM registados e os DIMM ECC não são suportados
SATA 2	Controlador Serial ATA integrado		Velocidades de transmissão de dados até 3.0 Gb/s. Compatibilidade com a especificação SATA versão 2.0
LAN	RTL8111G (H61MHP & H61MGP & H61MGP2) Auto negociação de 10/100/1000 Mb/s Capacidade semi/full-duplex RTL8106E (H61MLP) Auto negociação de 10/100 Mb/s Capacidade semi/full-duplex		
Suporte para áudio de alta definição	ALC662		Suporta a especificação High-Definition Audio Saída de áudio de 5.1 canais
Ranhuras	Ranhura PCI Express Gen2 x16 Ranhura PCI Express Gen2 x1	x1 x1	(dependendo da CPU)
	Ranhura PCI	x1	
Conectores na placa	Conector SATA2	x4	Cada conector suporta 1 dispositivo SATA2
	Conector do painel frontal	x1	Para suporte de várias funções no painel frontal
	Conector de áudio frontal	x1	Suporta a função de áudio no painel frontal
	Conector da ventoinha da CPU	x1	Alimentação da ventoinha da CPU (com a função Smart Fan)
	Conector da ventoinha do sistema	x1	Alimentação da ventoinha do sistema
	Conector para limpeza do CMOS Conector USB2.0	x1 x2	Cada conector suporta 2 portas USB2.0 no painel frontal
	Conector de alimentação (24 pinos)	x1	
	Conector de alimentação (4 pinos)	x1	
Entradas/Saídas no painel traseiro	Teclado PS/2 Rato PS/2 Porta VGA Porta HDMI	x1 x1 x1 x1	 (only for H61MHP)

ESPECIFICAÇÕES			
	Porta série	x1	
	Porta para impressora	x1	(except H61MGP2)
	Porta LAN	x1	
	Porta USB2.0	x4	
	Tomada de áudio	x3	
Tamanho da placa	174 mm (L) X 235 mm (A)		
Sistemas operativos suportados	Windows XP / Vista / 7 / 8		A Biostar reserva-se o direito de adicionar ou remover suporte para qualquer sistema operativo com ou sem aviso prévio.

Polish

SPEC			
Procesor	Socket 1155 Procesor Intel Core i7 / i5 / i3 / Pentium / Celeron		Obsługa Execute Disable Bit / Enhanced Intel SpeedStep® / Intel Architecture-64 / Extended Memory 64 Technology / Virtualization Technology / Hyper Threading
Chipset	Intel H61		
Pamięć główna	Gniazda DDR3 DIMM x 2 Maks. wielkość pamięci 16GB Każde gniazdo DIMM obsługuje moduły 512MB/1GB/2GB/4GB/8GB DDR3		Moduł pamięci DDR3 z trybem podwójnego kanału Obsługa DDR3 1066 / 1333 /1600 Brak obsługi Registered DIMM oraz ECC DIMM
Super I/O	IT8728 Zapewnia najbardziej powszechne funkcje Super I/O. Interfejs Low Pin Count		Funkcje kontroli warunków pracy, Monitor H/W Kontroler/Monitor prędkości wentylatora Funkcja ITE "Smart Guardian"
SATA 2	Zintegrowany kontroler Serial ATA		Transfer danych do 3.0 Gb/s. Zgodność ze specyfikacją SATA w wersji 2.0
LAN	RTL8111G (H61MHP & H61MGP & H61MGP2) 10/100/1000 Mb/s z automatyczną negocjacją szybkości Działanie w trybie połowicznego / pełnego dupleksu RTL8106E (H61MLP) 10/100 Mb/s z automatyczną negocjacją szybkości Działanie w trybie połowicznego / pełnego dupleksu		
Obsługa audio HD	ALC662		Obsługa High-Definition Audio 5.1 kanałowe wyjście audio
Gniazda	Gniazdo PCI Express Gen2 x16	x1	(w zależności od procesora)
	Gniazdo PCI Express Gen2 x1	x1	
	Gniazdo PCI	x1	
Złącza wbudowane	Złącze SATA2	x4	Każde złącze obsługuje 1 urządzenie SATA2
	Złącze panela przedniego	x1	Obsługa elementów panela przedniego
	Przednie złącze audio	x1	Obsługa funkcji audio na panelu przednim
	Złącze główkowe wentylatora procesora	x1	Zasilanie wentylatora procesora (z funkcją Smart Fan)
	Złącze główkowe wentylatora systemowego	x1	Zasilanie wentylatora systemowego
	Złącze główkowe kasowania CMOS	x1	
	Złącze USB2.0	x2	Każde złącze obsługuje 2 porty USB2.0 na panelu przednim
	Złącze zasilania (24 pinowe)	x1	
	Złącze zasilania (4 pinowe)	x1	
Back Panel I/O	Klawiatura PS/2	x1	
	Mysz PS/2	x1	
	Port VGA	x1	
	Port HDMI	x1	(only for H61MHP)

SPEC			
	Port szeregowy	x1	
	Port drukarki	x1	(except H61MGP2)
	Port LAN	x1	
	Port USB2.0	x4	
	Gniazdo audio	x3	
Wymiary płyty	174 mm (S) X 235 mm (W)		
Obsluga systemu operacyjnego	Windows XP / Vista / 7 / 8		Biostar zastrzega sobie prawo dodawania lub odwoływania obsługi dowolnego systemu operacyjnego bez powiadomienia.

Russian

СПЕЦ		
CPU (центральный процессор)	Socket 1155 Процессор Intel Core i7 / i5 / i3 / Pentium / Celeron	Поддержка технологий Execute Disable Bit / Enhanced Intel SpeedStep® / Intel Architecture-64 / Extended Memory 64 Technology / технологии виртуализация / Hyper Threading
Набор микросхем	Intel H61	
Основная память	Слоты DDR3 DIMM x 2 Максимальная ёмкость памяти 16 ГБ Каждый модуль DIMM поддерживает 512МБ/1ГБ/2ГБ/4ГБ/8ГБ DDR3	Модуль памяти с двухканальным режимом DDR3 Поддержка DDR3 1066 / 1333 /1600 Не поддерживает зарегистрированные модули DIMM and ECC DIMM
Super I/O	IT8728 Обеспечивает наиболее используемые действующие функциональные возможности Super I/O. Интерфейс с низким количеством выводов	Инициативы по охране окружающей среды, Аппаратный монитор Регулятор скорости вентилятора/ монитор Функция ITE "Smart Guardian" (Интеллектуальная защита)
SATA 2	Встроенное последовательное устройство управления ATA	скорость передачи данных до 3.0 гигабит/с. Соответствие спецификации SATA версия 2.0
Локальная сеть	RTL8111G (H61MHP & H61MGP & H61MGP2) Автоматическое согласование 10/100/1000 Мб/с Частичная / полная дуплексная способность RTL8106E (H61MLP) Автоматическое согласование 10/100 Мб/с Частичная / полная дуплексная способность	
Звуковая поддержка жесткого диска	ALC662	Звуковая поддержка High-Definition 5.1канальный звуковой выход
Слоты	Слот PCI Express Gen2 x16 x1 Слот PCI Express Gen2 x1 x1 Слот PCI x1	(в зависимости от процессора)
Встроенный разъём	Разъём SATA2 x4	Каждый разъём поддерживает 1 устройство SATA2
	Разъём на лицевой панели x1	Поддержка устройств на лицевой панели
	Входной звуковой разъём x1	Поддержка звуковых функций на лицевой панели
	Контактирующее приспособление вентилятора центрального процессора x1	Источник питания для вентилятора центрального процессора (с функцией интеллектуального вентилятора)
	Контактирующее приспособление вентилятора системы x1	Источник питания для вентилятора системы
	Открытое контактирующее приспособление CMOS x1	
	USB2.0-разъём x2	Каждый разъём поддерживает 2 USB2.0-порта на лицевой панели
	Разъем питания (24 вывод) x1 Разъем питания (4 вывод) x1	

СПЕЦ			
Задняя панель средств ввода-вывода	Клавиатура PS/2	x1	
	Мышь PS/2	x1	
	Порт VGA	x1	
	Порт HDMI	x1	(only for H61MHP)
	Последовательный порт	x1	
	Порт подключения принтера	x1	(except H61MGP2)
	Порт LAN	x1	
	USB2.0-порт	x4	
	Гнездо для подключения наушников	x3	
Размер панели	174 мм (Ш) X 235 мм (В)		
Поддержка OS	Windows XP / Vista / 7 / 8		Biostar сохраняет за собой право добавлять или удалять средства обеспечения для OS с или без предварительного уведомления.

Arabic

المواصفات			
وحدة المعالجة المركزية	Socket 1155 بتردد Intel Core i7 / i5 / i3 / Pentium / Celeron معالجات يصل إلى		تدعم تقنيات Execute Disable Bit / Enhanced Intel SpeedStep® / Intel Architecture-64 / Extended Memory 64 Technology / Virtualization Technology / Hyper Threading
مجموعة الشرائح	Intel H61		
الذاكرة الرئيسية	القناة مزدوجة DDR3 وحدة ذاكرة 1333 /1600 / 1066 سعات DDR3 نوع من الذاكرة تدعم مع تتوافق لا التي وتلك DIMM الذاكرة رقائق تدعم لا بايت ميجا ECC		فتحة DDR3 DIMM عدد2 سعة ذاكرة قصوى 16 جيجا بايت ميجا بايت و1/ 512/ سعة DDR3 تدعم ذاكرة من نوع DIMM تدعم كل فتحة و2/ و4/ و8 جيجا بايت
Super I/O	IT8728 الأكثر استخداماً. Super I/O توفر وظيفة Low Pin Count Interface تدعم تقنية		وسائل التحكم في البيئة: مراقب لمعرفة حالة الأجهزة مراقب في سرعة المروحة ITE من "Smart Guardian" وظيفة
SATA 2	متكامل Serial ATA متحكم		جيجابت/ثانية 3.0 نقل البيانات بسرعات تصل إلى 2.0 الإصدار SATA مطابقة لمواصفات
شبكة داخلية	RTL8111G (H61MHP & H61MGP & H61MGP2) ثنائيةإمكانية النقل المزدوج الكامل/النصفي / بايت ميجا 10/100/1000 تلقائي تفاوض RTL8106E (H61MLP) ثنائيةإمكانية النقل المزدوج الكامل/النصفي / بايت ميجا 10/100 تلقائي تفاوض		
دعم الصوت عالي التعريف	ALC662		تدعم تقنية الصوت عالي التعريف من 5.1 قنوات لخرج الصوت
الفتحات	فتحة PCI Express Gen2 x16 فتحة PCI Express Gen2 x1 فتحة PCI	عدد 1 عدد 1 عد1	اعتمادا على وحدة المعالجة المركزية
المنافذ على سطح اللوحة	منفذ SATA2 منفذ اللوحة الأمامية منفذ الصوت الأمامي وصلة مروحة وحدة المعالجة المركزية وصلة مروحة النظام وصلة مسح CMOS منفذ USB2.0 منفذ توصيل الطاقة (24دبوس) منفذ توصيل الطاقة (4دبابيس)	عدد 4 عدد 1 عدد 1 عدد 1 عدد 1 عدد 1 عدد 2 عدد 1 عدد 1	يدعم كل منفذ واحد من أجهزة SATA2 يدعم تجهيزات اللوحة الأمامية يدعم وظيفة الصوت باللوحة الأمامية لتوصيل الطاقة لمروحة وحدة المعالجة مع وظيفة Smart Fan لتوصيل الطاقة لمروحة النظام يدعم كل منفذ فتحتي USB2.0 باللوحة الأمامية
مناقذ دخل/خرج اللوحة الخلفية	وحة مفاتيح PS/2 ماوس PS/2 منفذ تسلسلي منفذ طابعة منفذ VGA مناقذ HDMI منفذ شبكة اتصال محلية مناقذ USB مقبس صوت	عدد 1 عدد 1 عدد 1 عدد 1 عدد 1 عدد 1 عدد 1 عدد 4 عدد 3	(except H61MGP2) (only for H61MHP)

المواصفات		
حجم اللوحة	174 مم (عرض) X 235 مم (ارتفاع)	
دعم أنظمة التشغيل	Windows XP / Vista / 7 / 8	تحتفظ Biostar بحقها في إضافة أو إزالة الدعم لأي نظام تشغيل بإخطار أو بدون إخطار.

Japanese

仕様			
CPU	Socket 1155 Intel Core i7 / i5 / i3 / Pentium / Celeron プロセッサ		Execute Disable Bit / Enhanced Intel SpeedStep® / Intel Architecture-64 / Extended Memory 64 Technology / Virtualization Technology / Hyper Threadingをサポートします
チップセット	Intel H61		
メインメモリ	DDR3 DIMMスロット x 2 最大メモリ容量16GB 各DIMMは 512MB/1GB/2GB/4GB/8GB DDR3をサポート		デュアル チャンネルモードDDR3メモリモジュール DDR3 1066 / 1333 / 1600 をサポート 登録済みDIMMとECC DIMMはサポートされません
Super I/O	IT8728 もっとも一般に使用されるレガシーSuper I/O機能を採用しています。 低ピンカウントインターフェイス		環境コントロールイニシアチブ、 H/Wモニター ファン速度コントローラ/ モニター ITEの「スマートガーディアン」機能
SATA 2	統合シリアルATAコントローラ		最高3.0 Gb/秒のデータ転送速度 SATAバージョン2.0仕様に準拠
LAN	RTL8111G (H61MHP & H61MGP & H61MGP2) 10/100/1000 Mb/秒のオートネゴシエーション 半/全二重機能 RTL8106E (H61MLP) 10/100 Mb/秒のオートネゴシエーション 半/全二重機能		
HDオーディオのサポート	ALC662		ハイデフィニションオーディオのサポート 5.1 チャンネルオーディオアウト
スロット	PCI Express Gen2 x16スロット	x1	（CPUに依存）
	PCI Express Gen2 x1スロット	x1	
	PCIスロット	x1	
オンボードコネクタ	SATA2コネクタ	x4	各コネクタは1つのSATA2デバイスをサポートします
	フロントパネルコネクタ	x1	フロントパネル機能をサポートします
	フロントオーディオコネクタ	x1	フロントパネルオーディオ機能をサポートします
	CPUファンヘッダ	x1	CPUファン電源装置(スマートファン機能を搭載)
	システムファンヘッダ	x1	システムファン電源装置
	CMOS クリアヘッダ	x1	
	USB2.0コネクタ	x2	各コネクタは2つのフロントパネルUSB2.0ポートをサポートします
	電源コネクタ(24ピン)	x1	
	電源コネクタ(4ピン)	x1	
背面パネル I/O	PS/2キーボード	x1	
	PS/2マウス	x1	
	VGAポート	x1	
	HDMIポート	x1	(only for H61MHP)
	シリアルポート	x1	
	プリンタポート	x1	(except H61MGP2)

仕様			
	LANポート	x1	
	USB2.0ポート	x4	
	オーディオジャック	x3	
ボードサイズ	174 mm (幅) X 235 mm (高さ)		
OSサポート	Windows XP / Vista / 7 / 8		Biostarは事前のサポートなしにOSサポートを追加または削除する権利を留保します。

2013/09/18