FCC Information and Copyright

This equipment has been tested and found to comply with the limits of a Class B digital device, pursuant to Part 15 of the FCC Rules. These limits are designed to provide reasonable protection against harmful interference in a residential installation. This equipment generates, uses, and can radiate radio frequency energy and, if not installed and used in accordance with the instructions, may cause harmful interference to radio communications. There is no guarantee that interference will not occur in a particular installation.

The vendor makes no representations or warranties with respect to the contents here and specially disclaims any implied warranties of merchantability or fitness for any purpose. Further the vendor reserves the right to revise this publication and to make changes to the contents here without obligation to notify any party beforehand.
Duplication of this publication, in part or in whole, is not allowed without first obtaining the vendor's approval in writing.

The content of this user's manual is subject to be changed without notice and we will not be responsible for any mistakes found in this user's manual. All the brand and product names are trademarks of their respective companies.

Dichiarazione di conformità sintetica
Ai sensi dell'art. 2 comma 3 del D.M. 275 del 30/10/2002
Si dichiara che questo prodotto è conforme alle normative vigenti e soddisfa i requisiti essenziali richiesti dalle direttive 2004/108/CE, 2006/95/CE e 1999/05/CE quando ad esso applicabili

Short Declaration of conformity
We declare this product is complying with the laws in force and meeting all the essential requirements as specified by the directives 2004/108/CE, 2006/95/CE and 1999/05/CE whenever these laws may be applied

Table Of Contents

Chapter 1: Introduction

1.1 Before You Start

Thank you for choosing our product. Before you start installing the motherboard, please make sure you follow the instructions below:

- Prepare a dry and stable working environment with sufficient lighting.
- Always disconnect the computer from power outlet before operation.
- Before you take the motherboard out from anti-static bag, ground yourself properly by touching any safely grounded appliance, or use grounded wrist strap to remove the static charge.
- Avoid touching the components on motherboard or the rear side of the board unless necessary. Hold the board on the edge, do not try to bend or flex the board.
- Do not leave any unfastened small parts inside the case after installation. Loose parts will cause short circuits which may damage the equipment.
- Keep the computer from dangerous area, such as heat source, humid air and water.
- The operating temperatures of the computer should be 0 to 45 degrees Celsius.
- To avoid injury, be careful of:
  Sharp pins on headers and connectors
  Rough edges and sharp corners on the chassis
  Damage to wires that could cause a short circuit

1.2 Package Checklist

- Serial ATA Cable x1
- SATA Power Cable x1
- Quick Installation Guide x1
- Fully Setup Driver DVD x1

Note

» *The package contents may be different due to the sales region or models in which it was sold. For more information about the standard package in your region, please contact your dealer or sales representative.*

1.3 Specifications

Specifications	
CPU Support	Socket 1151 for 8/9th Intel® Core i9 / i7 / i5 / i3 / Pentium / Celeron processor Maximum CPU TDP (Thermal Design Power): 95Watt * Please refer to www.biostar.com.tw for CPU support list.
Chipset	INTEL® B360
Memory	Supports Single Channel DDR4 1866/ 2133/ 2400/ 2666 1x DDR4 SO-DIMM Memory Slot, Max. Supports up to 16 GB Memory Each DIMM supports non-ECC 4/8/16GB DDR4 module * Please refer to www.biostar.com.tw for Memory support list.
Storage	1x SATA III Connector (6Gb/s) 1x M.2 (32Gb/s) : Support PCI-E & SATA SSD
LAN	RTL8111H 10/ 100/ 1000 Mb/s auto negotiation, Half / Full duplex capability
USB	6x USB 2.0 port (4 on rear I/Os and 2 via internal header)
Expansion Slots	7x PCIe 2.0 x16 Slot (x1) 1x PCIe 3.0 x16 Slot (x16) * Maximum VGA cards mining support are depening on VGA Driver or mining software.
Rear I/Os	1x HDMI Port 1x LAN port 4x USB 2.0 Port
Internal I/Os	1x SATA III Connector (6Gb/s) 1x USB 2.0 Header (each header supports 2 USB 2.0 ports) 8x 6-Pin Power Connector (12V_In for Motherboard) 8x 6-Pin Power Connector (12V_Out for VGA Card) 1x SATA Power Connector 1x CPU Fan Connector 7x System Fan Connector (SysFan 6/ SysFan 7 Without monitoring) 2x Front Panel Header 1x Clear CMOS Header
Form Factor	485mm x 235mm
OS Support	Windows 10(64bit) * Biostar reserves the right to add or remove support for any OS with or without notice.

1.4 Rear Panel Connectors

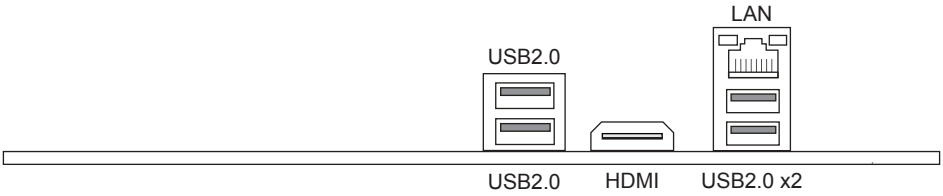

Note

» *HDMI port only works with an Intel® integrated Graphics Processor.*

» *Maximum resolution*
HDMI: 4096 x 2160 @24Hz

1.5 Motherboard Layout

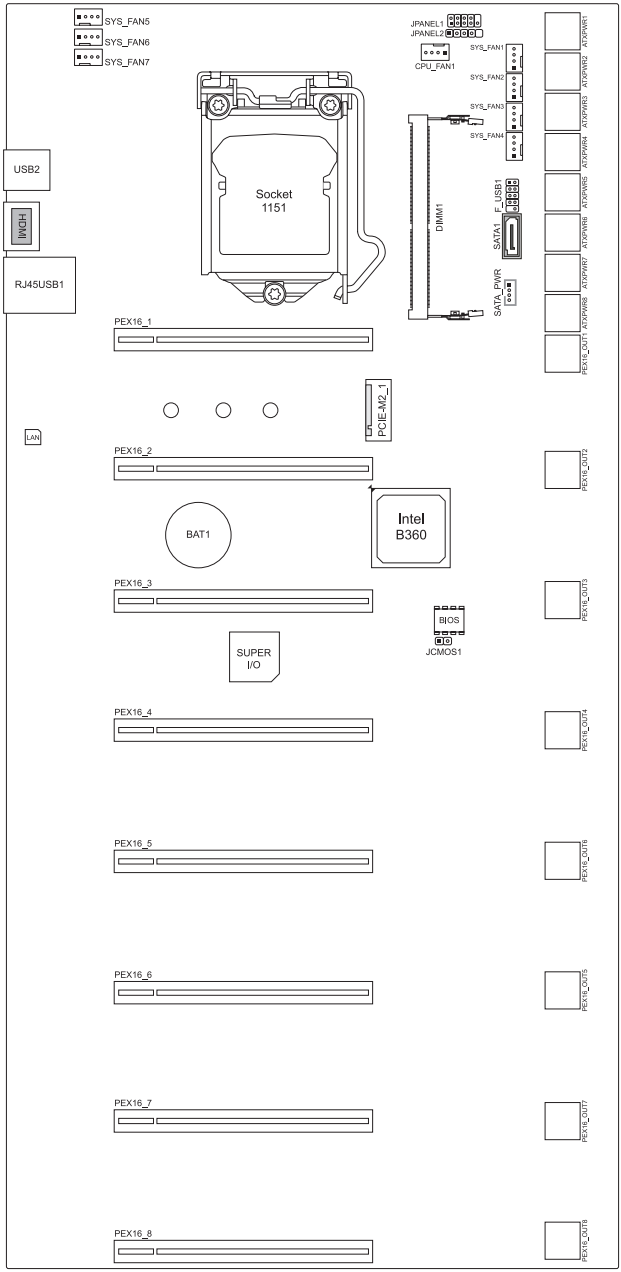

Note

» ■ *represents the 1st pin.*

Chapter 2: Hardware Installation

2.1 Install Central Processing Unit (CPU)

Step 1: Locate the CPU socket on the motherboard

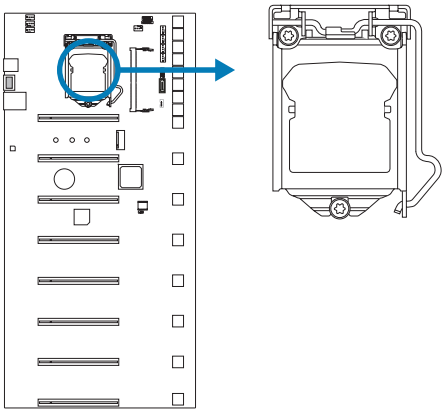

Note

» *Remove pin cap before installation, and make good preservation for future use. When the CPU is removed, cover the pin cap on the empty socket to ensure pin legs won't be damaged.*

» *The motherboard might equip with two different types of pin cap. Please refer below instruction to remove the pin cap.*

Step 2: Pull the socket locking lever out from the socket and then raise the lever up.

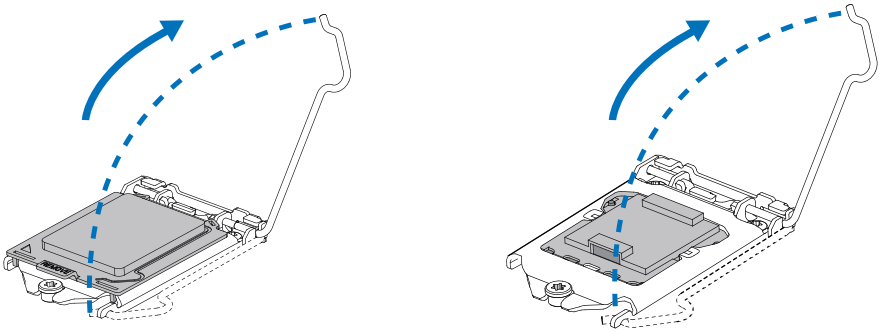

Step 3: Remove the Pin Cap.

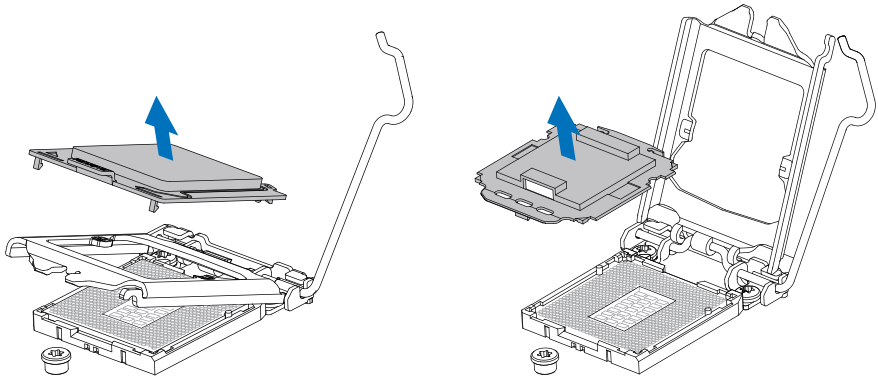

Step 4: Hold processor with your thumb and index fingers, oriented as shown. Align the notches with the socket. Lower the processor straight down without tilting or sliding the processor in the socket.

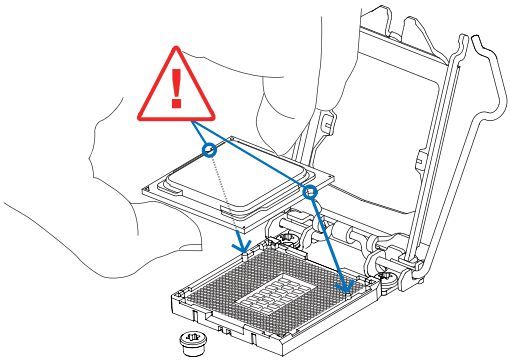

Step 5: Hold the CPU down firmly, and then lower the lever to locked position to complete the installation.

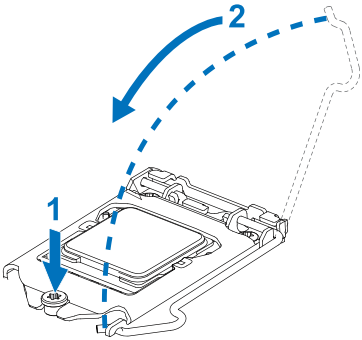

Note

- *Ensure that you install the correct CPU designed for LGA1151 socket.*
- *The CPU fits only in one correct orientation. Do not force the CPU into the socket to prevent damaging the CPU.*

2.2 Install a Heatsink

Step 1: Place the CPU fan assembly on top of the installed CPU and make sure that the four fasteners match the motherboard holes. Orient the assembly and make the fan cable is closest to the CPU fan connector.

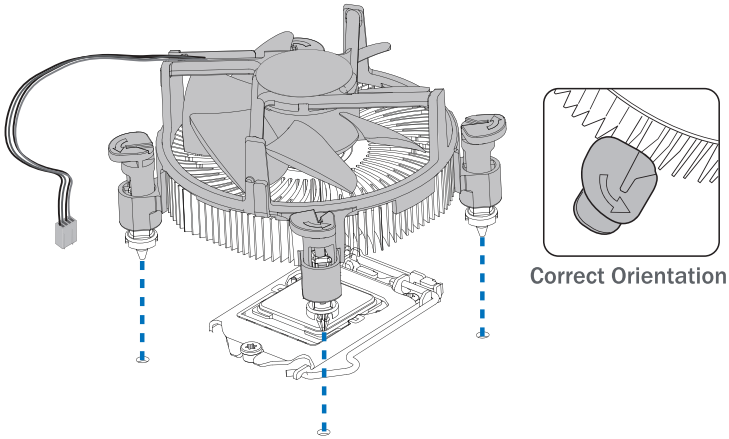

Step 2: Press down two fasteners at one time in a diagonal sequence to secure the CPU fan assembly in place. As each fastener locks into position a click should be heard.

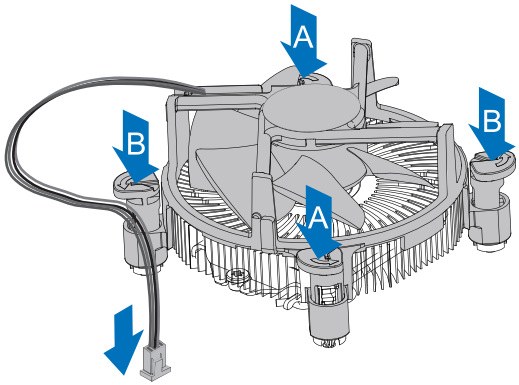

Note

- *Apply the thermal interface material on the CPU before heatsink installation, if necessary.*
- *Do not forget to connect the CPU fan connector.*
- *For proper installation, please kindly refer to the installation manual of your CPU heatsink.*

2.3 Connect Cooling Fans

These fan headers support cooling-fans built in the computer. The fan cable and connector may be different according to the fan manufacturer.

CPU_FAN1: CPU Fan Header

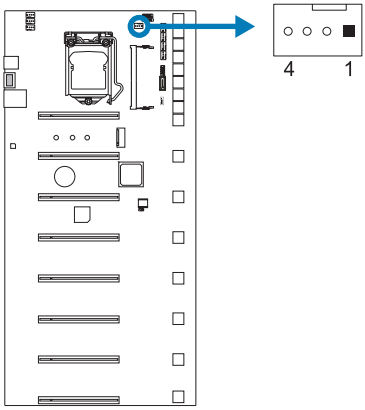

Pin	Assignment
1	Ground
2	+12V
3	FAN1_Tach
4	FAN1_Ctl

SYS_FAN1/ SYS_FAN2/ SYS_FAN3/ SYS_FAN4/ SYS_FAN5: System Fan Header

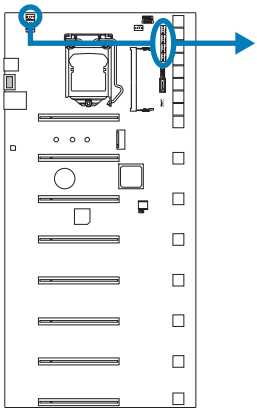

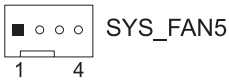

SYS_FAN1

SYS_FAN2

SYS_FAN3

SYS_FAN4

Pin	Assignment
1	Ground
2	+12V
3	Monitoring_Tach
4	Fan Control

SYS_FAN6/ SYS_FAN7: System Fan Header (Without monitoring)

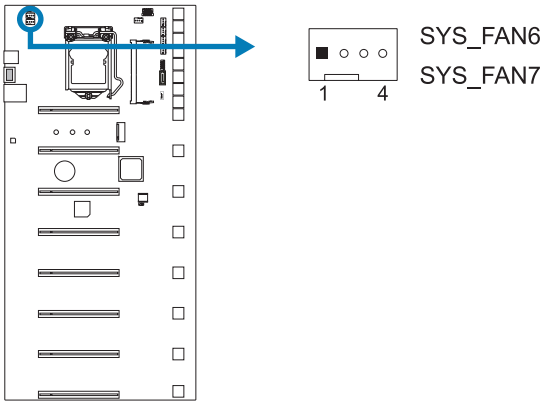

Pin	Assignment
1	Ground
2	+12V
3	NA
4	Fan Control

Note

» *CPU_FAN1, SYS_FAN1/ 2/ 3/ 4/ 5/ 6/ 7 support 4-pin and 3-pin head connectors. When connecting with wires onto connectors, please note that the red wire is the positive and should be connected to pin#2, and the black wire is Ground and should be connected to pin#1(GND).*

2.4 Install System Memory

DDR4 Modules

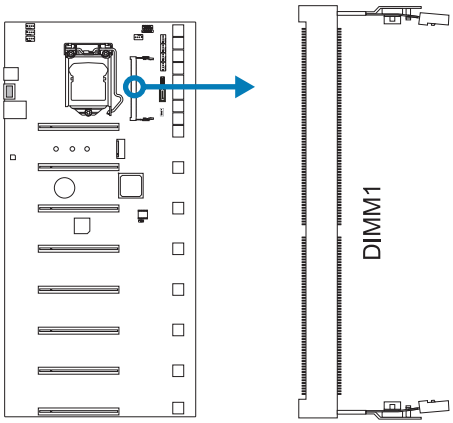

Step 1: Align a DIMM on the slot such that the notch on the DIMM matches the break on the Slot.

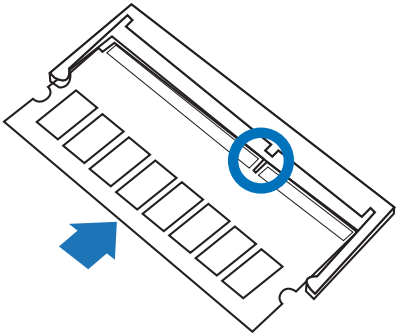

Step 2: Insert the DIMM firmly into the slot until the retaining chip snap back in place and the DIMM is properly seated.

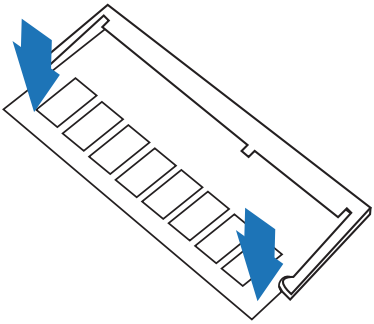

Note

» *If the DIMM does not go in smoothly, do not force it. Pull it all the way out and try again.*

Memory Capacity

DIMM Socket Location	DDR4 Module	Memory Size
DIMM1	4GB/8GB/16GB	Max is 16GB.

2.5 Expansion Slots

PEX16_1: PCI-Express Gen3 x16 Slot (x16)

- PCI-Express 3.0 compliant.
- Theoretical maximum bandwidth using two slots simultaneously is 16GB/s for each slot, a total of 32GB/s.

PEX16_2/PEX16_3/PEX16_4/PEX16_5/PEX16_6/PEX16_7/PEX16_8:

PCI-Express Gen2 x16 Slots (x1)

- PCI-Express 2.0 compliant.
- Data transfer bandwidth up to 500MB/s per direction; 1GB/s in total.

PCIE-M2_1: M.2 (Key M) Slot

- The M.2 slot supports M.2 Type 2242/2260/2280 SSD module. When installing M.2 SSD module, please place the screw and hex pillar to correct position.
- Support M.2 SATA III (6.0 Gb/s) module and M.2 PCI Express module up to Gen3 x4 (32Gb/s).

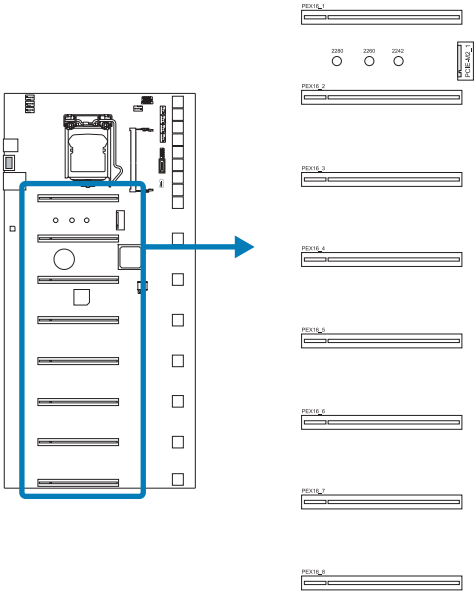

Note

» *Maximum VGA cards mining support are depening on VGA Driver or mining software.*

Install an Expansion Card

You can install your expansion card by following steps:

- Read the related expansion card's instruction document before install the expansion card into the computer.
- Remove your computer's chassis cover, screws and slot bracket from the computer.
- Place a card in the expansion slot and press down on the card until it is completely seated in the slot.
- Secure the card's metal bracket to the chassis back panel with a screw.
- Replace your computer's chassis cover.
- Power on the computer, if necessary, change BIOS settings for the expansion card.
- Install related driver for the expansion card.

2.6 Jumper & Switch Setting

JCMOS1: Clear CMOS Jumper

The jumper allows users to restore the BIOS safe setting and the CMOS data. Please carefully follow the procedures to avoid damaging the motherboard.

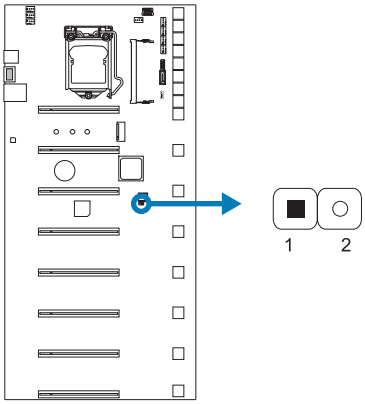

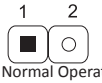

Pin 1-2 Open: Normal Operation (Default)

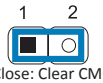

Pin 1-2 Close: Clear CMOS data

<u>Clear CMOS Procedures:</u>

1. Remove AC power line.
2. Set the jumper to "Pin 1-2 close", you can use a metal object like a screwdriver to touch the two pins.
3. Wait for five seconds.
4. After clearing the CMOS values, be sure the jumper is "Pin 1-2 open".
5. Power on the AC.
6. Load Optimal Defaults and save settings in CMOS.

2.7 Headers & Connectors

ATXPWR1/ 2/ 3/ 4/ 5/ 6/ 7/ 8: DC-IN Power Source Connector (12V-In from PSU for motherboard)

The connector provides +12V to the DC-IN power circuit.

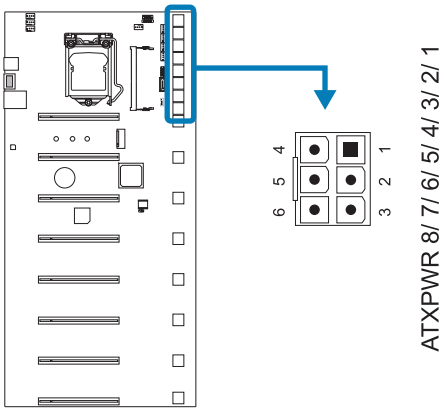

Pin	Assignment
1	+12V_Input
2	+12V_Input
3	+12V_Input
4	Ground
5	Ground
6	Ground

Note

- *Before you power on the system, please make sure that ATXPWR1~8 connectors have been plugged-in.*
- *Insufficient power supplied to the system may result in instability or the peripherals not functioning properly. Use of a PSU with a higher power output is recommended when configuring a system with more power-consuming devices.*

PEX16_OUT1/ 2/ 3/ 4/ 5/ 6/ 7/ 8: PCIe Power Source Connector (12V-Out for VGA Card)

The connector provides +12V to the PCIe power circuit.

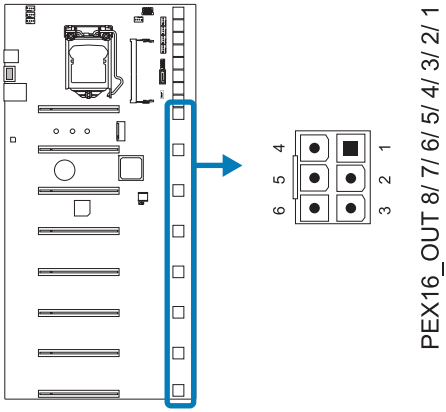

Pin	Assignment
1	+12V_Output
2	+12V_Output
3	+12V_Output
4	Ground
5	Ground
6	Ground

Note

» *If the graphics card needs external power supply, connect the cable through PEX16_OUT1 ~ 8 connector.*

» *Insufficient power supplied to the system may result in instability or the peripherals not functioning properly. Use of a PSU with a higher power output is recommended when configuring a system with more power-consuming devices.*

SATA_POWER: SATA Power Source Connector

This connector allows you SATA power connector to the SATA hard drive.

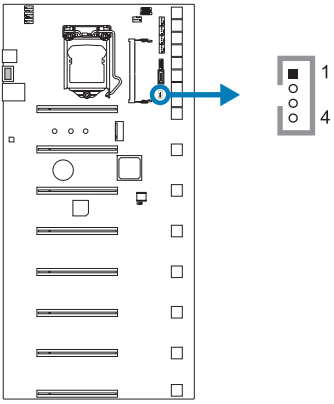

Pin	Assignment
1	12V
2	Ground
3	Ground
4	5V

JPANEL1: Front Panel Header

This connector includes Power-on, Reset, HDD LED and Power LED connections. It allows user to connect the PC case's front panel switch functions.

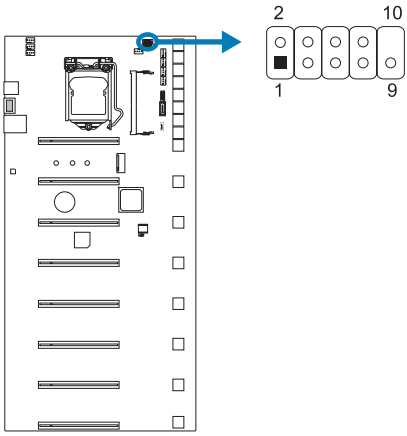

Pin	Assignment	Function	Pin	Assignment	Function
1	SATA_LED (+)	HDD	2	Power LED (+)	Power
3	SATA LED (-)	LED	4	Power LED (-)	LED
5	Ground	Reset	6	Power Button	Power-On
7	Reset Control	Button	8	Ground	Button
9	N/A	N/A	10	Key	Key

JPANEL2: Front Panel Header

This connector allows user to connect the PC case's front panel switch functions.

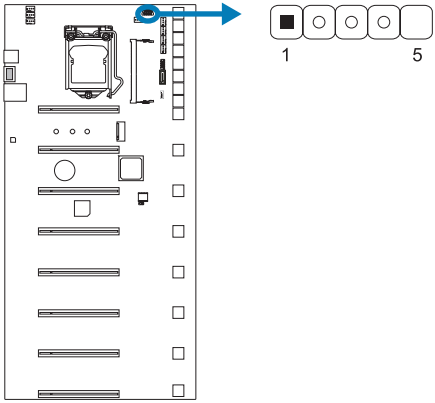

Pin	Assignment	Function
1	Power LED (+)	Power LED
2	Power LED (-)	
3	Power Button	Power-On Button
4	Ground	
5	Key	Key

SATA1: Serial ATA Connectors

These connectors connect to SATA hard disk drives via SATA cables.

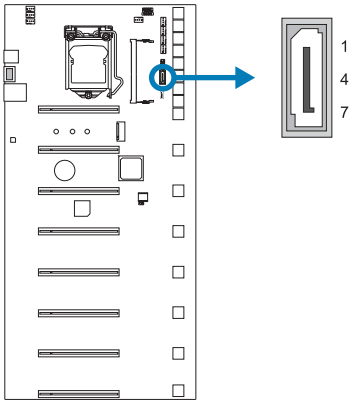

Pin	Assignment
1	Ground
2	TX+
3	TX-
4	Ground
5	RX-
6	RX+
7	Ground

F_USB1: Header for USB 2.0 Ports at Front Panel

This header allows user to add additional USB ports on the PC front panel, and also can be connected with a wide range of external peripherals.

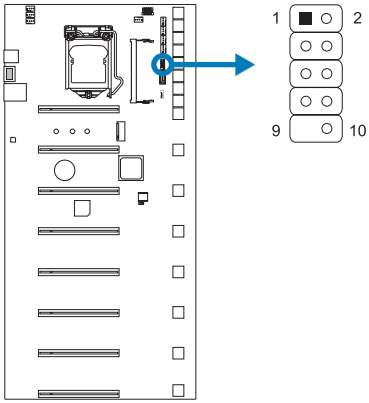

Pin	Assignment
1	+5V (fused)
2	+5V (fused)
3	USB-
4	USB-
5	USB+
6	USB+
7	Ground
8	Ground
9	Key
10	NC

Chapter 3: UEFI BIOS & Software

3.1 UEFI BIOS Setup

- The BIOS Setup program can be used to view and change the BIOS settings for the computer. The BIOS Setup program is accessed by pressing the <DEL> key after the Power-On Self-Test (POST) memory test begins and before the operating system boot begins.
- For further information of setting up the UEFI BIOS, please refer to the UEFI BIOS Manual on our website.

3.2 BIOS Update

The BIOS can be updated using either of the following utilities:

- BIOSTAR BIOS-FLASHER: Using this utility, the BIOS can be updated from a file on a hard disk, a USB drive (a flash drive or a USB hard drive), or a CD-ROM.
- BIOSTAR BIOS Update Utility: It enables automated updating while in the Windows environment. Using this utility, the BIOS can be updated from a file on a hard disk, a USB drive (a flash drive or a USB hard drive), or a CD-ROM, or from the file location on the Web.

BIOSTAR BIOS-FLASHER

Note

» *This utility only allows storage device with FAT32/16 format and single partition.*
» *Shutting down or resetting the system while updating the BIOS will lead to system boot failure.*

Updating BIOS with BIOSTAR BIOS-FLASHER

1. Go to the website to download the latest BIOS file for the motherboard.
2. Then, copy and save the BIOS file into a USB flash (pen) drive.(Only supported FAT/FAT32 format)
3. Insert the USB pen drive that contains the BIOS file to the USB port.
4. Power on or reset the computer and then press <F12> during the POST process.

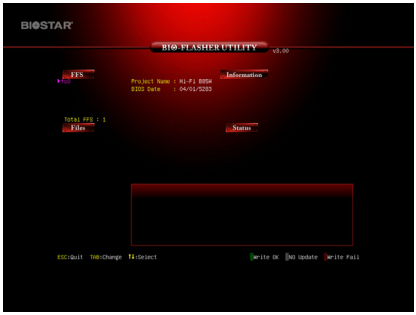

5. After entering the POST screen, the BIOS-FLASHER utility pops out. Choose <fs0> to search for the BIOS file.

6. Select the proper BIOS file, and a message asking if you are sure to flash the BIOS file. Click “Yes” to start updating BIOS.

7. A dialog pops out after BIOS flash is completed, asking you to restart the system. Press the <Y> key to restart system.

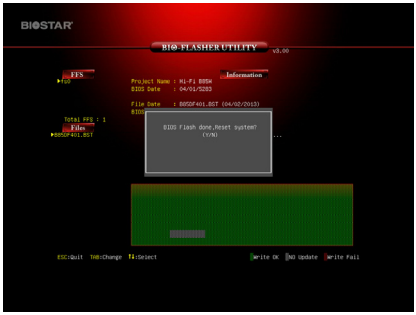

8. While the system boots up and the full screen logo shows up, press <DEL> key to enter BIOS setup.
After entering the BIOS setup, please go to the <Save & Exit>, using the <Restore Defaults> function to load Optimized Defaults, and select <Save Changes and Reset> to restart the computer. Then the BIOS Update is completed.

<u>BIOS Update Utility (through the Internet)</u>

1. Installing BIOS Update Utility from the DVD Driver.
2. Please make sure the system is connected to the internet before using this function.

3. Launch BIOS Update Utility and click the “Online Update” button on the main screen.

4. An open dialog will show up to request your agreement to start the BIOS update. Click “Yes” to start the online update procedure.

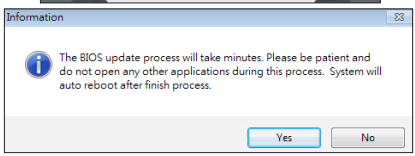

5. If there is a new BIOS version, the utility will ask you to download it. Click “Yes” to proceed.

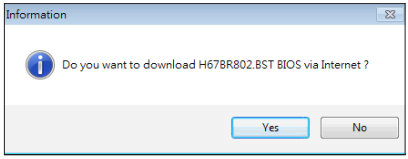

6. After the download is completed, you will be asked to program (update) the BIOS or not. Click “Yes” to proceed.

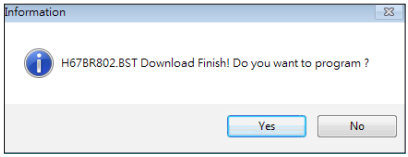

7. After the updating process is finished, you will be asked you to reboot the system. Click “OK” to reboot.

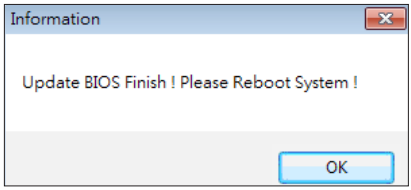

8. While the system boots up and the full screen logo shows up, press <DEL> key to enter BIOS setup.
After entering the BIOS setup, please go to the <Save & Exit>, using the <Restore Defaults> function to load Optimized Defaults, and select <Save Changes> and <Reset> to restart the computer. Then, the BIOS Update is completed.

BIOS Update Utility (through a BIOS file)

1. Installing BIOS Update Utility from the DVD Driver.
2. Download the proper BIOS from http://www.biostar.com.tw/

3. Launch BIOS Update Utility and click the “Update BIOS” button on the main screen.

4. A warning message will show up to request your agreement to start the BIOS update. Click “OK” to start the update procedure.

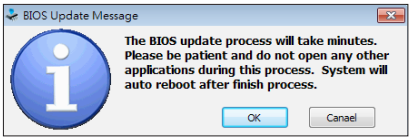

5. Choose the location for your BIOS file in the system. Please select the proper BIOS file, and then click on “Open”. It will take several minutes, please be patient.

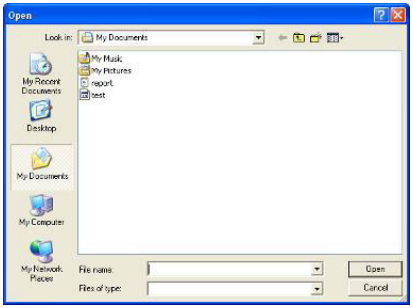

6. After the BIOS Update process is finished, click on “OK” to reboot the system.

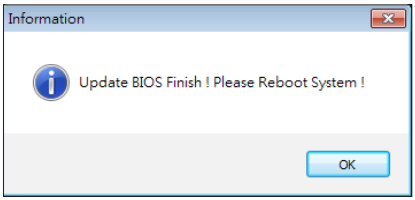

7. While the system boots up and the full screen logo shows up, press <DEL> key to enter BIOS setup.
After entering the BIOS setup, please go to the <Save & Exit>, using the <Restore Defaults> function to load Optimized Defaults, and select <Save Changes and Reset> to restart the computer. Then, the BIOS Update is completed.

Backup BIOS

Click the Backup BIOS button on the main screen for the backup of BIOS, and select a proper location for your backup BIOS file in the system, and click “Save”.

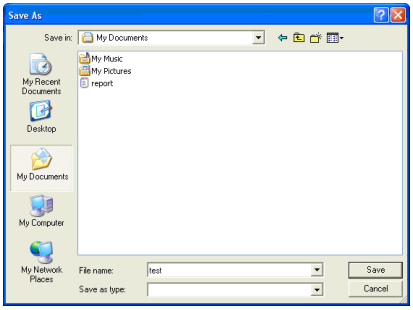

3.3 Software

Installing Software

1. Insert the Setup DVD to the optical drive. The driver installation program would appear if the Auto-run function has been enabled.
2. Select Software Installation, and then click on the respective software title.
3. Follow the on-screen instructions to complete the installation.

Launching Software

After the installation process is completed, you will see the software icon showing on the desktop. Double-click the icon to launch it.

Note

» *All the information and content about following software are subject to be changed without notice. For better performance, the software is being continuously updated.*

» *The information and pictures described below are for your reference only. The actual information and settings on board may be slightly different from this manual.*

BIOScreen Utility

This utility allows you to personalize your boot logo easily. You can choose BMP as your boot logo so as to customize your computer.

Please follow the step-by-step instructions below to update boot logo:

- Load Image: Choose the picture as the boot logo.
- Transform: Transform the picture for BIOS and preview the result.
- Update Bios: Write the picture to BIOS Memory to complete the update.

eHot-Line

eHot-Line is a convenient utility that helps you to contact with our Tech-Support system. This utility will collect the system information which is useful for analyzing the problem you may have encountered, and then send these information to our tech-support department to help you fix the problem.

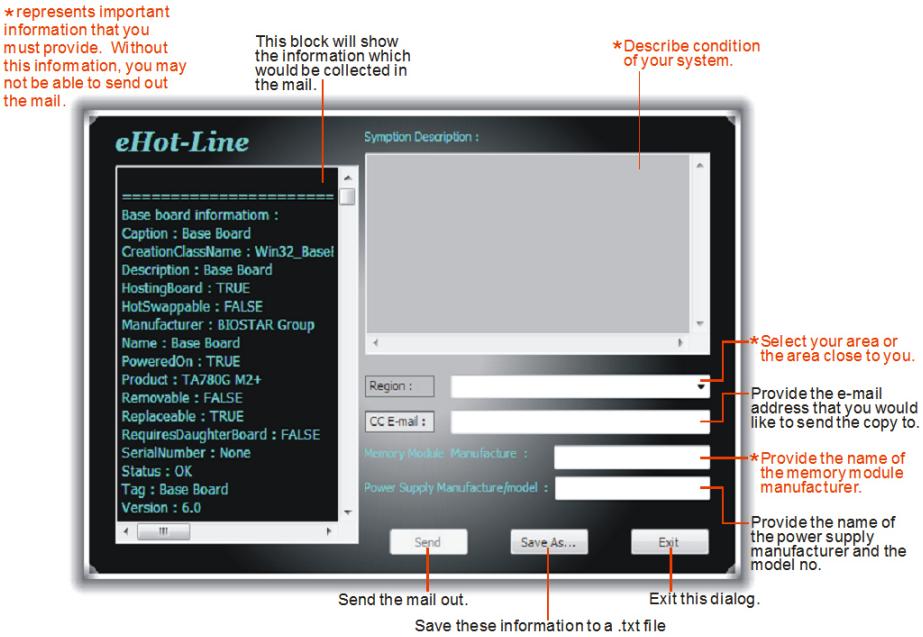

After filling up this information, click “Send” to send the mail out. A warning dialog would appear asking for your confirmation; click “Send” to confirm or “Do Not Send” to cancel.

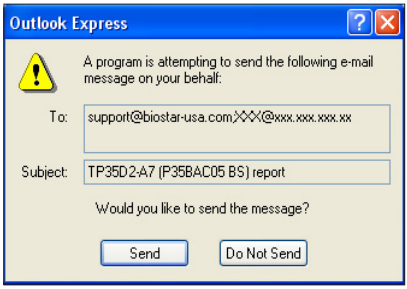

If you want to save this information to a .txt file, click “Save As...” and then you will see a saving dialog appears asking you to enter file name.

Enter the file name and then click “Save”. Your system information will be saved to a .txt file.

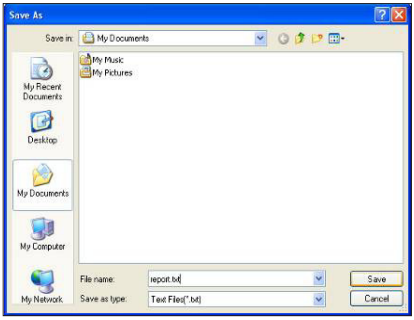

Open the saved .txt file, you will see your system information including motherboard/BIOS/CPU/video/device/OS information. This information is also concluded in the sent mail.

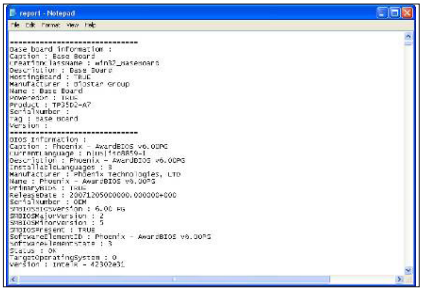

Note

- *Before you use this utility, please set Outlook Express as your default e-mail client application program.*
- *We will not share customer’s data with any other third parties, so please feel free to provide your system information while using eHot-Line service.*
- *If you are not using Outlook Express as your default e-mail client application, you may need to save the system information to a .txt file and send the file to our tech support with other e-mail application. Go to the following website http://www.biostar.com.tw/app/en/about/contact.php for getting our contact information.*

Chapter 4: Useful help

4.1 Driver Installation

After you installed your operating system, please insert the Fully Setup Driver DVD into your optical drive and install the driver for better system performance.
You will see the following window after you insert the DVD

The setup guide will auto detect your motherboard and operating system.

A. Driver Installation

To install the driver, please click on the Driver icon. The setup guide will list the compatible driver for your motherboard and operating system. Click on each device driver to launch the installation program.

B. Software Installation

To install the software, please click on the Software icon. The setup guide will list the software available for your system, click on each software title to launch the installation program.

C. Manual

Aside from the paperback manual, we also provide manual in the Driver DVD. Click on the Manual icon to browse for available manual.

Note

» *If this window didn't show up after you insert the Driver DVD, please use file browser to locate and execute the file SETUP.EXE under your optical drive.*

» *You will need Acrobat Reader to open the manual file. Please download the latest version of Acrobat Reader software from http://get.adobe.com/reader/*

4.2 AMI BIOS Beep Code

Boot Block Beep Codes

Number of Beeps	Description
Continuing	Memory sizing error or Memory module not found

POST BIOS Beep Codes

Number of Beeps	Description
1	Success booting.
8	Display memory error (system video adapter)

4.3 AMI BIOS post code

Code	Description
10	PEI Core is started
11	Pre-memory CPU initialization is started
15	Pre-memory North Bridge initialization is started
19	Pre-memory South Bridge initialization is started
2B	Memory initialization. Serial Presence Detect (SPD) data reading
2C	Memory initialization. Memory presence detection
2D	Memory initialization. Programming memory timing information
2E	Memory initialization. Configuring memory
2F	Memory initialization (other).
31	Memory Installed
32	CPU post-memory initialization is started
33	CPU post-memory initialization. Cache initialization
34	CPU post-memory initialization. Application Processor(s) (AP) initialization
35	CPU post-memory initialization. Boot Strap Processor (BSP) selection
36	CPU post-memory initialization. System Management Mode (SMM) initialization
37	Post-Memory North Bridge initialization is started
3B	Post-Memory North Bridge initialization (North Bridge module specific)
4F	DXE IPL is started
60	DXE Core is started
F0	Recovery condition triggered by firmware (Auto recovery)
F1	Recovery condition triggered by user (Forced recovery)
F2	Recovery process started
F3	Recovery firmware image is found
F4	Recovery firmware image is loaded
E0	S3 Resume is stared (S3 Resume PPI is called by the DXE IPL)
E1	S3 Boot Script execution
E2	Video repost
E3	OS S3 wake vector call
60	DXE Core is started
61	NVRAM initialization
62	Installation of the South Bridge Runtime Services
63	CPU DXE initialization is started
68	PCI host bridge initialization
69	North Bridge DXE initialization is started
6A	North Bridge DXE SMM initialization is started

Code	Description
70	South Bridge DXE initialization is started
71	South Bridge DXE SMM initialization is started
72	South Bridge devices initialization
78	South Bridge DXE Initialization (South Bridge module specific)
79	ACPI module initialization
90	Boot Device Selection (BDS) phase is started
91	Driver connecting is started
92	PCI Bus initialization is started
93	PCI Bus Hot Plug Controller Initialization
94	PCI Bus Enumeration
95	PCI Bus Request Resources
96	PCI Bus Assign Resources
97	Console Output devices connect
98	Console input devices connect
99	Super IO Initialization
9A	USB initialization is started
9B	USB Reset
9C	USB Detect
9D	USB Enable
A0	IDE initialization is started
A1	IDE Reset
A2	IDE Detect
A3	IDE Enable
A4	SCSI initialization is started
A5	SCSI Reset
A6	SCSI Detect
A7	SCSI Enable
A8	Setup Verifying Password
A9	Start of Setup
AB	Setup Input Wait
AD	Ready To Boot event
AE	Legacy Boot event
AF	Exit Boot Services event
B0	Runtime Set Virtual Address MAP Begin
B1	Runtime Set Virtual Address MAP End
B2	Legacy Option ROM Initialization
B3	System Reset
B4	USB hot plug
B5	PCI bus hot plug
B6	Clean-up of NVRAM
B7	Configuration Reset (reset of NVRAM settings)

4.4 Troubleshooting

Probable	Solution
1. There is no power in the system. Power LED does not shine; the fan of the power supply does not work 2. Indicator light on keyboard does not shine.	1. Make sure power cable is securely plugged in. 2. Replace cable. 3. Contact technical support.
System is inoperative. Keyboard lights are on, power indicator lights are lit, and hard drives are running.	Using even pressure on both ends of the DIMM, press down firmly until the module snaps into place.
System does not boot from a hard disk drive, but can be booted from optical drive.	1. Check cable running from disk to disk controller board. Make sure both ends are securely plugged in; check the drive type in the standard CMOS setup. 2. Backing up the hard drive is extremely important. All hard disks are capable of breaking down at any time.
System only boots from an optical drive. Hard disks can be read, applications can be used, but system fails to boot from a hard disk.	1. Back up data and applications files. 2. Reformat the hard drive. Re-install applications and data using backup disks.
Screen message shows “Invalid Configuration” or “CMOS Failure.”	Review system’s equipment. Make sure correct information is in setup.
System cannot boot after user installs a second hard drive.	1. Set master/slave jumpers correctly. 2. Run SETUP program and select correct drive types. Call the drive manufacturers for compatibility with other drives.

CPU Overheated

If the system shutdown automatically after power on system for seconds, that means the CPU protection function has been activated.

When the CPU is over heated, the motherboard will shutdown automatically to avoid a damage of the CPU, and the system may not power on again.

In this case, please double check:
1. The CPU cooler surface is placed evenly with the CPU surface.
2. CPU fan is rotated normally.
3. CPU fan speed is fulfilling with the CPU speed.

After confirmed, please follow steps below to relief the CPU protection function.
1. Remove the power cord from power supply for seconds.
2. Wait for seconds.
3. Plug in the power cord and boot up the system.

Or you can:
1. Clear the CMOS data. (See “Close CMOS Header: JCMOS1” section)
2. Wait for seconds.
3. Power on the system again.

APPENDIX I: Specifications in Other Languages

Arabic

	المواصفات
قاعدة وحدة المعالجة المركزية	المأخذ 1151 لمعالج ايه إم دى Pentium / Celeron / i3 / i5 / i7 / Core i9 (الجيـــل 9/8) Intel® الحد الأقصى للطاقة الحرارية في تصميم المعالج (TDP – thermal design power): 95 واط. * يرجى الرجوع إلى الموقع www.biostar.com.tw لقائمة دعم المعالج CPU.
مجموعة الشرائح	INTEL® B360
الذاكرة	يدعم قناة واحدة DDR4 1866/2133/2400/2666 1x دي. دي. ار. DDR4 فتحات الذاكرة المزدوجة DIMM - SO ، تتحمل كحد أقصى 16 جيجابايت ذاكرة كل فتحة مزدوجة DIMM تتحمل دون ECC 16/8/4جيجابايت دي. دي. ار DDR4 * يرجى الرجوع إلى الموقع www.biostar.com.tw لقائمة دعم الذاكرة.
التخزين	صلة 1x ساتا SATA III(6Gb/s) x1 فتحة M.2 (32Gb/s) - تـدعم SSD SATA & PCI-E
شبكة محلية LAN	RTL8111H 10 / 100 / 1000 ميجابايت / الثانية ، تحديد تلقائي ، النصف / القدرة القصوى المزدوجة
ناقل متسلسل عام USB	منافذ 6 x ناقل متسلسل عام USB 2.0 (4 في المداخل والمخارج الخلفية و 2 من خلال الموزع الداخلي)
فتحات التوسع	7 x فتحة منفذ الملحقات الإضافية PCIe 2.0 x 16 (x1) 1 x فتحة منفذ الملحقات الإضافية PCIe 3.0 x 16 (x16) *الحد الأقصى لدعم بطاقات فغا التعدين تعتمد على برنامج تشغيل فغا أو التعدين.
المداخل والمخارج الخلفية	فتحة توصيل عدد 1 x واجهة مرئية رقمية HDMI فتحة لتوصيل عدد 1 x الشبكة المحلية LAN فتحة توصيل عدد 4 x ناقل متسلسل عام USB 2.0
المداخل والمخارج الداخلية	وصلة 1x ساتا SATA III (6Gb/s) موزع 1 x ناقل متسلسل عام USB 2.0 (كل موزع يتحمل فتحتين ناقل متسلسل عام USB 2.0) وصلة للطاقة 8 x 6 دبوس (12V_In اللوحة الأم) وصلة للطاقة 8 x 6 دبوس (12V_ Out ل VGA) وصلة للطاقة 1 x SATA دبوس وصلة 1 x مروحة تبريد وحدة المعالجة المركزية وصلة 7 x مراوح تبريد المنظومة (SysFan6/ SysFan7 دون مراقبة) موزع 2 x اللوحة الأمامية موزع 1 x سيموس مباشر
عامل الشكل	485 مم x 235 مم
أنظمة التشغيل المدعومة	ويندوز(10(64bit * بيوستار BIOSTAR تحتفظ بحق إضافة أو أزلة الدعم لأي نظام تشغيل مع أو بدون أنظار .

German

Spezifikationen	
CPU-Unterstützung	Anschluss-1151 für den 8/9. Intel® Core i9 /i7 / i5 / i3 / Pentium / Celeron Prozessor Maximale CPU TDP (Thermal Design Power): 95 Watt * Bitte konsultieren Sie www.biostar.com.tw für CPU-Unterstützungsliste
Chipset	INTEL® B360
Festplattenspeicher	Unterstützt zweikanaliges DDR4 1866/2133/2400/2666 1x DDR4 SO-DIMM-SpeicherSlot, Max. Uterstützung bis zu 16 GB-Speicher Jedes DIMM unterstützt nicht-ECC 4/8/16 GB DDR4-Module * Bitte konsultieren Sie www.biostar.com.tw für für Speicherunterstützung Liste.
Arbeitsspeicher	1x SATA III-Verbindung (6Gb/s) 1x M.2 (32Gb/s) - Unterstützt PCI-E & SATA SSD
LAN	RTL8111H 10/ 100/ 1000 Mb Auto-Negotiation, Halb- / Voll-Duplex-fähig
USB	6x USB 2.0-Port (4 hintere I/Os und 2 via interne Header)
Erweiterungsanschlüsse	7x PCIe 2.0 x16-Slot (x1) 1x PCIe 3.0 x16-Slot (x16) * Maximale VGA-Karten Bergbau-Unterstützung sind abhängig von VGA-Treiber oder Bergbau-Software.
Hintere I/Os	1x HDMI-Port 1x LAN-Port 4x USB 2.0-Port
Interne I/Os	1x SATA III-Verbindung (6Gb/s) 1x USB 2.0-Header (jeder Header unterstützt 2 USB 2.0-Ports) 8x 6-Pin-Stromverbindung (12V_In für Motherboard) 8x 6-Pin-Stromverbindung (12V_Out für VGA Card) 1x SATA-Stromanschluss 1x CPU-Ventilatorverbindung 7x System-Ventilatorverbindung (SysFan6/ SysFan7 Ohne Überwachung) 2x Header für Frontpanel 1x Header für klares CMOS
Formfaktor	485 mm x 235mm
OS-Unterstützung	Windows 10(64bit) * Biostar reserves the right to add or remove support for any OS with or without notice.

Russian

Спецификации	
Поддержка центрального процессора	Сокет 1151 для 8/9-го процессоров Intel® Core i9 / i7 / i5 / i3 / Pentium / Celeron Максимальный термопакет центрального процессора (TDP): 95 ватт * Перечень поддержки центрального процессора смотрите на www.biostar.com.tw.
Набор микросхем	INTEL® B360
Память	Поддерживает двухканальный DDR4 1866/2133/2400/2666 1 гнезда платы памяти DDR4 SO-DIMM, максимальная память до 16 Гб Каждый модуль DIMM поддерживает модуль не-ECC 4/8/16 Гб DDR4 * Перечень поддержки памяти смотрите на www.biostar.com.tw.
Накопитель	Соединитель 1x SATA III (6Gb/s) 1x M.2 (32Gb/s) - Поддерживает PCI-E & SATA SSD
Локальная сеть	RTL8111H Автосогласование 10/ 100/ 1000 Мб/с, работает в полно/полудуплексном режиме
USB	6 порта USB 2.0 (4 сзади ввода-вывода и 2 через внутренние контакты)
Гнезда расшир.	7x PCIe 2.0 x16 гнездо (x1) 1x PCIe 3.0 x16 гнездо (x16) * Поддержка максимальной поддержки VGA-карт зависит от драйвера VGA или программного обеспечения для горнодобывающей промышленности.
Задняя плата ввода-вывода	1 порт HDMI 1 порт локальной сети 4 порта USB 2.0
Внутр. Плата ввода-вывода	Соединитель 1x SATA III (6Gb/s) 1 контакта USB 2.0 (каждый контакт поддерживает 2 порта USB 2.0) 8 6-выводный разъем питания (12V_In для Материнская плата) 8 6-выводный разъем питания (12V_Out для VGA Card) 1 разъем SATA питания 1 разъем вентилятора ЦП 7 разъема вентилятора системы (SysFan6/ SysFan7 Без мониторинга) 2 контакт передней панели 1 контакт микросхемы Clear CMOS
Конструктив	485мм x 235мм
Поддержка ОС	Windows 10(64bit) * Biostar оставляет за собой право добавлять или удалять поддержку любой ОС, с уведомлением или без.

Spanish

Especificaciones	
Compatibilidad con el procesador	Ranura 1151 para el 8/9º procesador Intel® Core i9 / i7 / i5 / i3 / Pentium / Celeron Alimentación de Proyección Térmica (TDP – Thermal Design Power): 95Watt *Por favor consultar con www.biostar.com.tw para la lista de compatibilidad con el procesador.
Tipo de Placa	INTEL® B360
Memoria	Soporta DDR4 1866/2133/2400 Un canal solo 1x DDR4 SO-DIMM Ranura de memoria Soporta hasta 16 GB Memoria Cada DIMM soporta un modulo non-ECC 4/8/16 GB DDR4 * Por favor consultar con www.biostar.com.tw para la lista de compatibilidad con el memoria.
Almacenamiento de información	Conector 1x SATA III (6Gb/s) 1x M.2 (32Gb/s) - Soporta PCI-E & SATA SSD
LAN	RTL8111H 10/ 100/ 1000 Mb/s auto negociación, capacidad dúplex Mitad/Completo
USB	Ranura 6x USB 2.0 (4 en las entrada/salidas posteriores y 2 por los distribuidores internos)
Ranuras de Extinción	Ranura 7x PCIe 2.0 x16 (x1) Ranura 1x PCIe 3.0 x16 (x16) * El soporte de minería de tarjetas VGA máximo depende del controlador VGA o del software de minería.
Panel trasero de E/S	Ranura 1x HDMI Ranura 1x LAN Ranura 4x USB 2.0
Conectores en placa	Conector 1x SATA III Distribuidor 1x USB 2.0 (cada distribuidor soporta 2 ranuras USB 2.0) Conector con 6 patillas x8 (12V_In para tarjeta madre) Conector con 6 patillas x8 (12V_Out para Tarjeta VGA) Conector de alimentación SATA x1 Conector Ventilador procesador x1 Conector Ventilador Sistema x7 (SysFan 6/ SysFan 7 Sin monitoreo) Distribuidor Panel Frontal x2 Distribuidor CMOS Directo x1
Factor de Forma	485mm x 235mm
Soporte OS	Windows 10(64bit) * Biostar reserva su derecho de añadir o retirar el soporte para cada OS con o sin notificación.

Thai

คุณสมบัติ	
ซีพียู	ซ็อกเก็ต 1151 สำหรับโปรเซสเซอร์ 8/9th Intel® Core i9 / i7 / i5 / i3 / Pentium / Celeron CPU TDP (Thermal Design Power) สูงสุด: 95Watt * เข้าชมได้ที่ www.biostar.com.tw สำหรับรายการซีพียูที่สนับสนุน
ชิพเซ็ต	INTEL® B360
หน่วยความจำ	สนับสนุน Single Channel DDR4 1866/2133/2400/2666 รองรับหน่วยความจำ 1 สล็อต DDR4 SO-DIMM สูงสุดถึง 16 GB ทุก DIMM สนับสนุนโมดูล non-ECC 4/8/16GB DDR4 * เข้าชมได้ที่ www.biostar.com.tw สำหรับรายการหน่วยความจำที่สนับสนุน
กราฟฟิก	รวมกราฟฟิกอยู่ในซีพียู
สตอเรจ	1x SATA III พอร์ตเชื่อมต่อ (6Gb/s) 1x M.2 (32Gb/s) - สนับสนุน PCI-E & SATA SSD
แลน	RTL8111H 10/ 100/ 1000 Mb/s การเจรจาอัตโนมัติ, ความสามารถในการเพล็กซ์ Half / Full
ยูเอสบี	6x USB 2.0 พอร์ต (4 พอร์ตด้านหลัง I/O และ 2 พอร์ต ผ่านพอร์ตเชื่อมต่อด้านใน)
สล็อตขยายเพิ่มเติม	7x PCIe 2.0 x16 สล็อต (x1) 1x PCIe 3.0 x16 สล็อต (x16) * การสนับสนุนการทำเหมืองข้อมูลการ์ด VGA สูงสุดขึ้นอยู่กับไดรเวอร์ VGA หรือซอฟต์แวร์การทำเหมืองแร่
พอร์ต I/O ด้านหลัง	1x HDMI พอร์ต 1x LAN พอร์ต 4x USB 2.0 พอร์ต
พอร์ต I/O ด้านใน	1x SATA III พอร์ตเชื่อมต่อ (6Gb/s) 1x USB 2.0 พอร์ตเชื่อมต่อ (หัวเชื่อมต่อทุกตัวรองรับ 2 พอร์ต USB 2.0) 8x 6-Pin Power พอร์ตเชื่อมต่อ (12V_In สำหรับ เมนบอร์ด) 8x 6-Pin Power พอร์ตเชื่อมต่อ (12V_Out สำหรับ VGA Card) 1x SATA Power พอร์ตเชื่อมต่อ 1x พอร์ตเชื่อมต่อ CPU Fan 7x พอร์ตเชื่อมต่อระบบ Fan (SysFan 6/ SysFan 7 โดยไม่ต้องติดตาม) 2x พอร์ตเชื่อมแต่แผงด้านหน้า 1x พอร์ต Clear CMOS
รูปแบบจากโรงงาน	235มม. x 485มม.
สนับสนุน OS	Windows 10(64bit) * Biostar ขอสงวนสิทธิ์ในการเพิ่มหรือถอดการสนับสนุนสำหรับระบบปฏิบัติการ OS ต่างๆ โดยไม่ต้องแจ้งให้ทราบล่วงหน้า